APPENDIX A
CITY STANDARDS

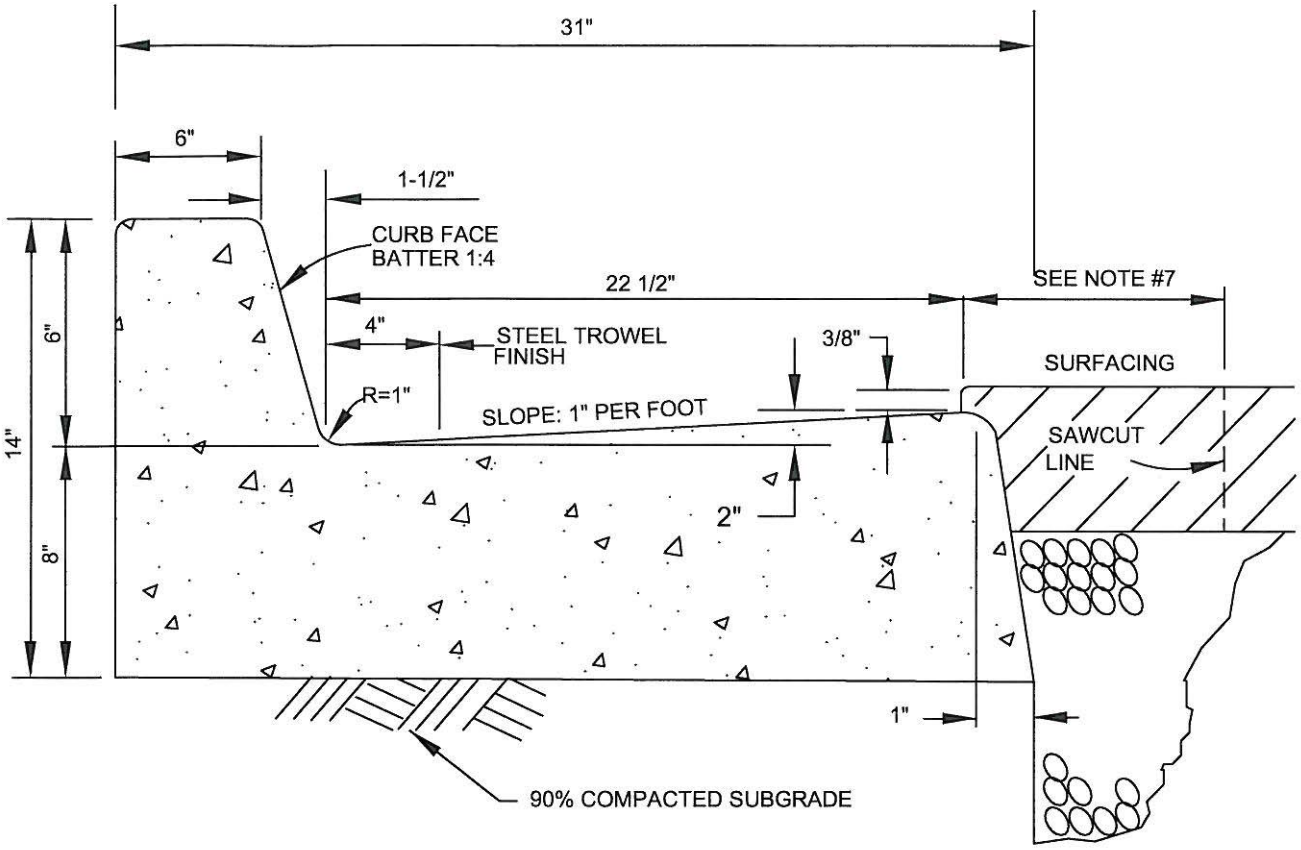

NOTES:

1. CONCRETE SHALL BE CLASS 560-C-3250 PCC; CURED WITH CURING COMPOUND.
2. ALL EXPOSED CORNERS SHALL BE FINISHED WITH 1/2" RADIUS.
3. FINISH SHALL BE FINE BROOM.
4. EXISTING PCC SHALL BE SAWCUT AT WEAKENED PLANE JOINT PRIOR TO REMOVAL.
5. CURBS SHALL HAVE WEAKENED PLANE JOINTS AT 10' INTERVALS; NO SCORELINES ALLOWED.
6. WHEN CURB AND GUTTER IS PLACED BY AN EXTRUSION MACHINE, FINISHING WORK SHALL PROVIDE AN ACCEPTABLE FINISH.
7. A MINIMUM 1' WIDE AC PAVEMENT REPAIR PATCH IS REQUIRED WHEN CURB AND GUTTER IS PLACED ADJACENT TO EXISTING AC PAVEMENT.

REVISIONS:		
NO.	DATE	APPRV'D
1	3/31/10	KF

APPROVED BY:

11/23/09

CITY ENGINEER — DATE

KIP D. FIELD

RCE NO. 45679 EXP. DATE 12-31-10

CITY OF CORONA

TYPE 6 CURB AND GUTTER

STANDARD PLAN NUMBER: **135**

SHT 1 OF 1

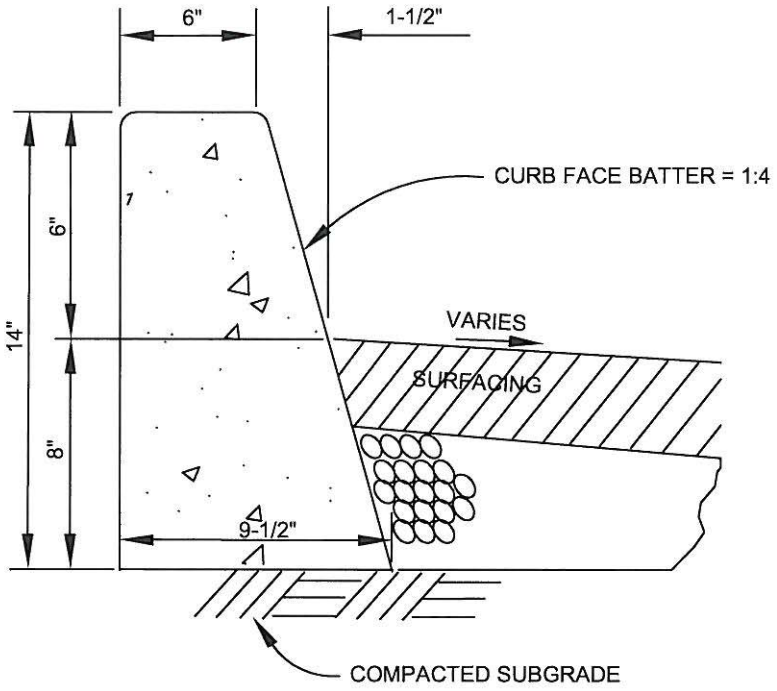

NOTES:

1. CONCRETE SHALL BE CLASS 560-C-3250 PCC, CURED WITH CURING COMPOUND.
2. ALL EXPOSED CORNERS SHALL BE FINISHED WITH 1/2" RADIUS.
3. FINISH SHALL BE FINE BROOM.
4. EXISTING PCC SHALL BE SAWCUT AT JOINT PRIOR TO REMOVAL.
5. CURBS SHALL HAVE COLD JOINTS AT BCR AND ECR AND AT 10' INTERVALS ONLY.
6. WHEN CURB AND GUTTER IS PLACED BY AN EXTRUSION MACHINE, FINISHING WORK SHALL PROVIDE AN ACCEPTABLE FINISH.

REGISTERED PROFESSIONAL ENGINEER
KIP D. FIELD
No. C 45679
Exp. 12-31-10
CIVIL
STATE OF CALIFORNIA

APPROVED BY:

11/23/09

CITY ENGINEER — DATE

KIP D. FIELD

REVISION	DESCRIPTION	BY	DATE

CITY OF CORONA

TYPE 6A CURB

STANDARD PLAN NUMBER: **137**

SHT 1 OF 1

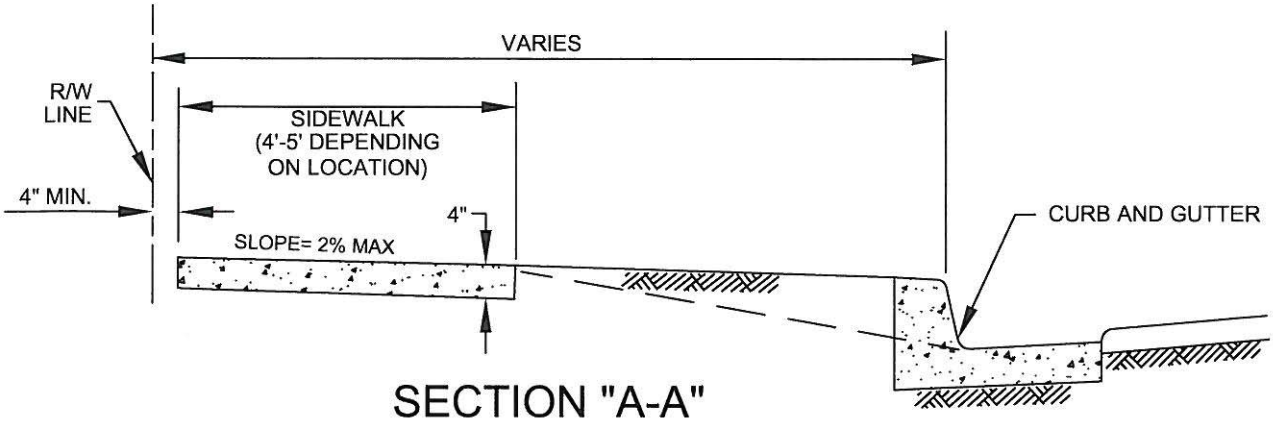

SECTION "A-A"

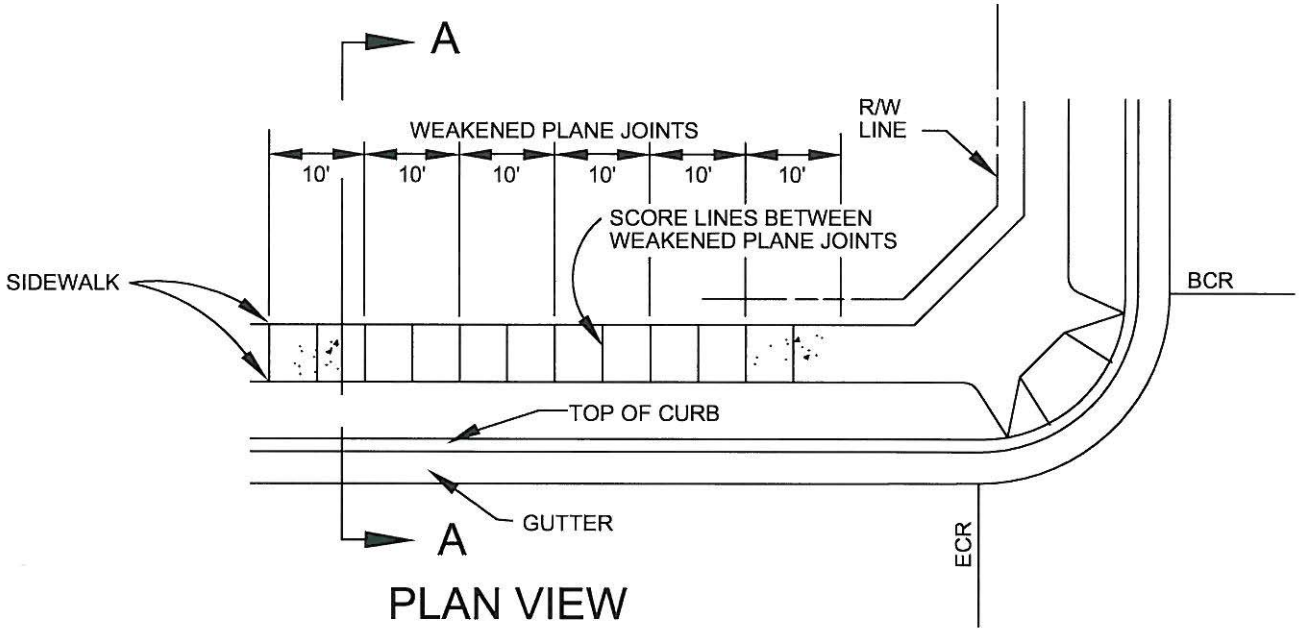

PLAN VIEW

NOTES:

1. THICKNESS OF SIDEWALK SHALL BE 4" EXCEPT IN DRIVEWAY APRONS WHERE 6" IS REQUIRED FOR RESIDENTIAL DRIVEWAYS AND 8" IS REQUIRED FOR COMMERCIAL DRIVEWAYS.
2. SIDEWALK SHALL HAVE 1-1/2" DEEP WEAKENED PLANE JOINTS AT INTERVALS SHOWN HEREON. JOINTS SHALL HAVE EDGES WITH 1/8" RADII.
3. CONCRETE SHALL BE CLASS 560-C-3250, CURE WITH CURING COMPOUND.
4. PARKWAY FROM CURB TO PROPERTY LINE TO BE BROUGHT TO GRADE BY CONTRACTOR BEFORE FINAL APPROVAL AND COMPACTED TO 90%.
5. SIDEWALKS SHALL BE FORMED IN SUCH A MANNER AS TO MAINTAIN 36" MINIMUM OF UNOBSTRUCTED PEDESTRIAN WAY AT ALL LOCATIONS, INCLUDING BUT NOT LIMITED TO STREET LIGHTS, POWER POLES, AND FIRE HYDRANTS.
6. NO FELT SHALL BE USED AT JOINTS UNLESS OTHERWISE APPROVED BY THE PUBLIC WORKS DIRECTOR.

REGISTERED PROFESSIONAL ENGINEER
KIP D. FIELD
No. C 45679
Exp. 12-31-10
CIVIL
STATE OF CALIFORNIA

APPROVED BY:

11/23/09

CITY ENGINEER — DATE

KIP D. FIELD

REVISION	DESCRIPTION	BY	DATE

CITY OF CORONA

SIDEWALK

STANDARD PLAN NUMBER: **142**

SHT 1 OF 1

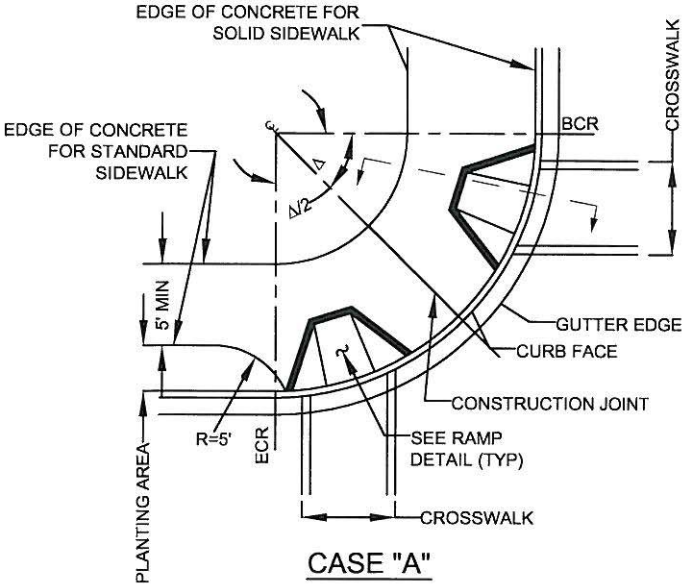

CASE "A"

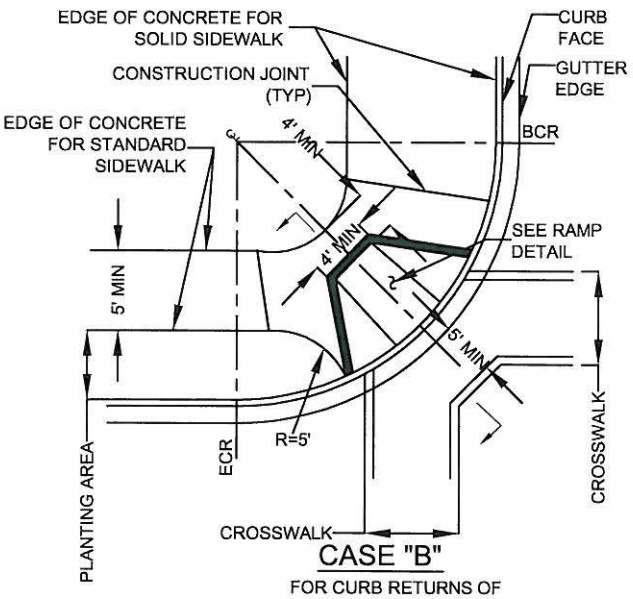

CASE "B"

FOR CURB RETURNS OF 25' RADIUS OR LESS

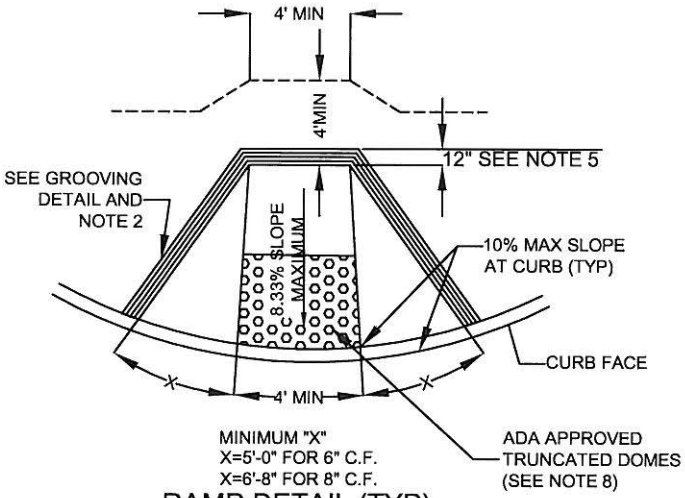

RAMP DETAIL (TYP)

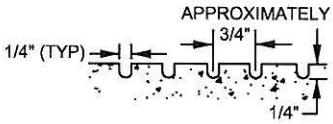

GROOVING DETAIL

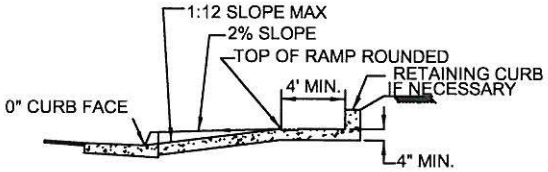

CROSS SECTIONAL VIEW

*FOR LONGITUDINALLY DEPRESSED SIDEWALK

NOTES:

1. ALL ACCESS RAMPS SHALL BE CONSTRUCTED TO THE MOST CURRENT REQUIREMENTS OF THE AMERICANS WITH DISABILITIES ACT (ADA) STANDARDS/CALIFORNIA CODE OF REGULATIONS TITLE 24-ACCESSIBILITY REGULATIONS. ADJUSTMENTS SHALL BE MADE IN THE FIELD TO ACHIEVE RAMP CONDITIONS.
2. CONCRETE SHALL BE CLASS 560-C-3250, CURED WITH CLEAR CURING COMPOUND.
3. A LEVEL 4' MINIMUM DEPTH LANDING IS REQUIRED AT THE TOP OF THE RAMP OVER THE ENTIRE RAMP WIDTH. CROSS SLOPE OF LANDING MAY NOT EXCEED 1:50 (2.0%).
4. X SHALL HAVE A MAXIMUM SLOPE OF 1:12 (8.33%).
5. GROOVED BORDER SHALL BE 1' WIDE ALONG THE TOP AND SIDES OF THE RAMP AT THE LEVEL SURFACE OF THE SIDEWALK. OMIT GROOVES ADJACENT TO NON-PAVED AREAS.
6. RAMP SURFACE AND FLARED SIDES SHALL BE SLIP-RESISTANT AND SHALL BE OF CONTRASTING FINISH FROM ADJACENT SIDEWALK (MEDIUM BROOM FINISH OR EQUIVALENT).
7. DIMENSIONS SHOWN FOR SLOPING PORTIONS OF RAMP VARY DUE TO FIELD CONDITIONS.
8. THE CENTER PORTION OF ALL PEDESTRIAN RAMPS SHALL CONTAIN TRUNCATED DOMES IN ACCORDANCE WITH THE LATEST EDITION OF ADA.

APPROVED BY:

11/23/09

CITY ENGINEER — DATE

KIP D. FIELD

CITY OF CORONA

PEDESTRIAN RAMP TYPE I

REVISION	DESCRIPTION	BY	DATE

STANDARD PLAN NUMBER: **146**

SHT 1 OF 1

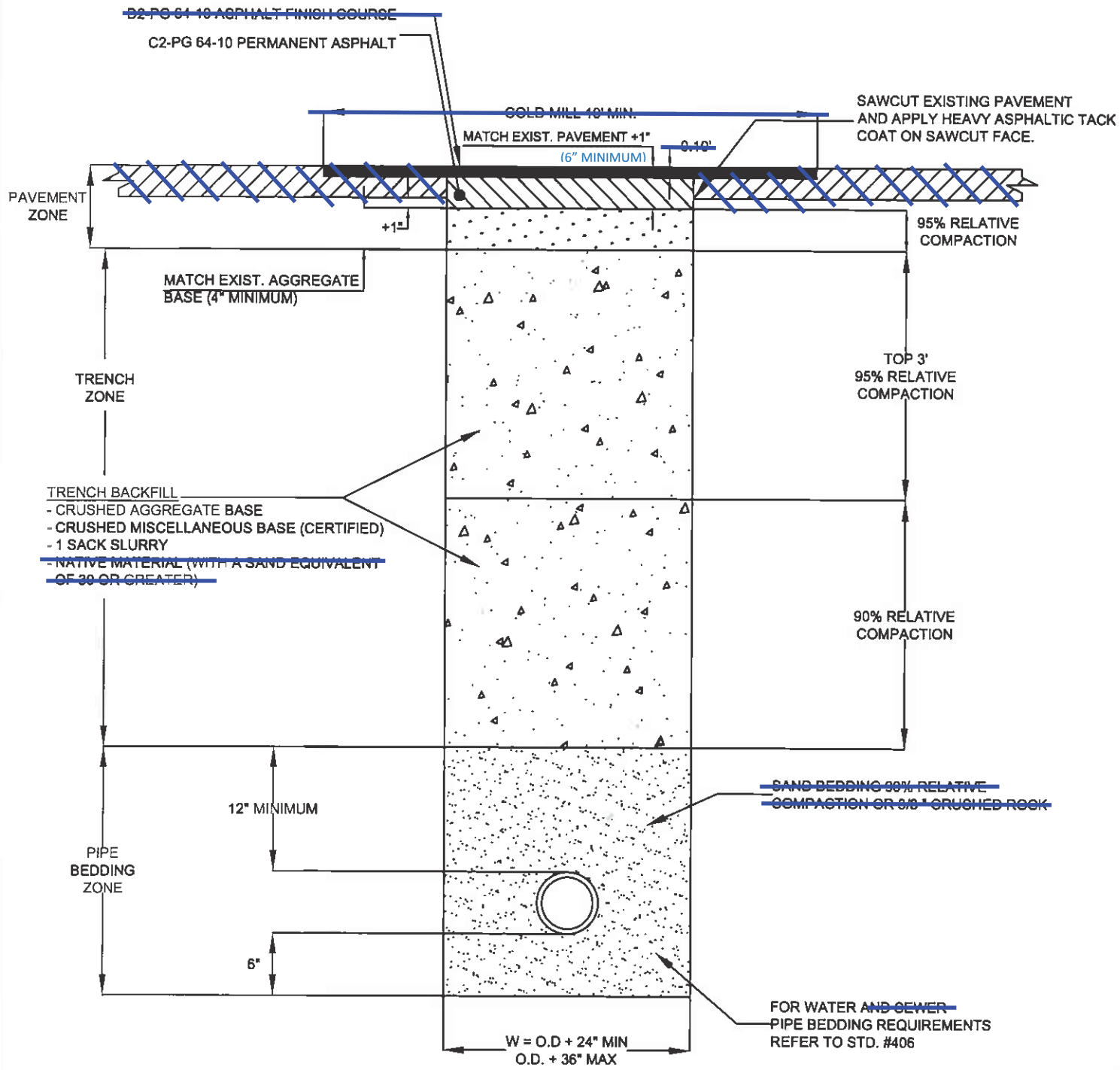

SEE SHEET 3 OF 3 FOR NOTES

REVISIONS:		
NO.	DATE	APPRV'D
1	3/31/10	KE
2	10/4/10	KE
3	6/21/11	KE
4	2/21/12	KE

APPROVED BY:

11-23-09

CITY ENGINEER — DATE

KIP D. FIELD

RCE NO. 45679 EXP. DATE 12-31-12

CITY OF CORONA

PERPENDICULAR TRENCH BACKFILL AND ROADWAY REPAIR

STANDARD PLAN NUMBER: 150

SHT 1 OF 3

MODIFIED

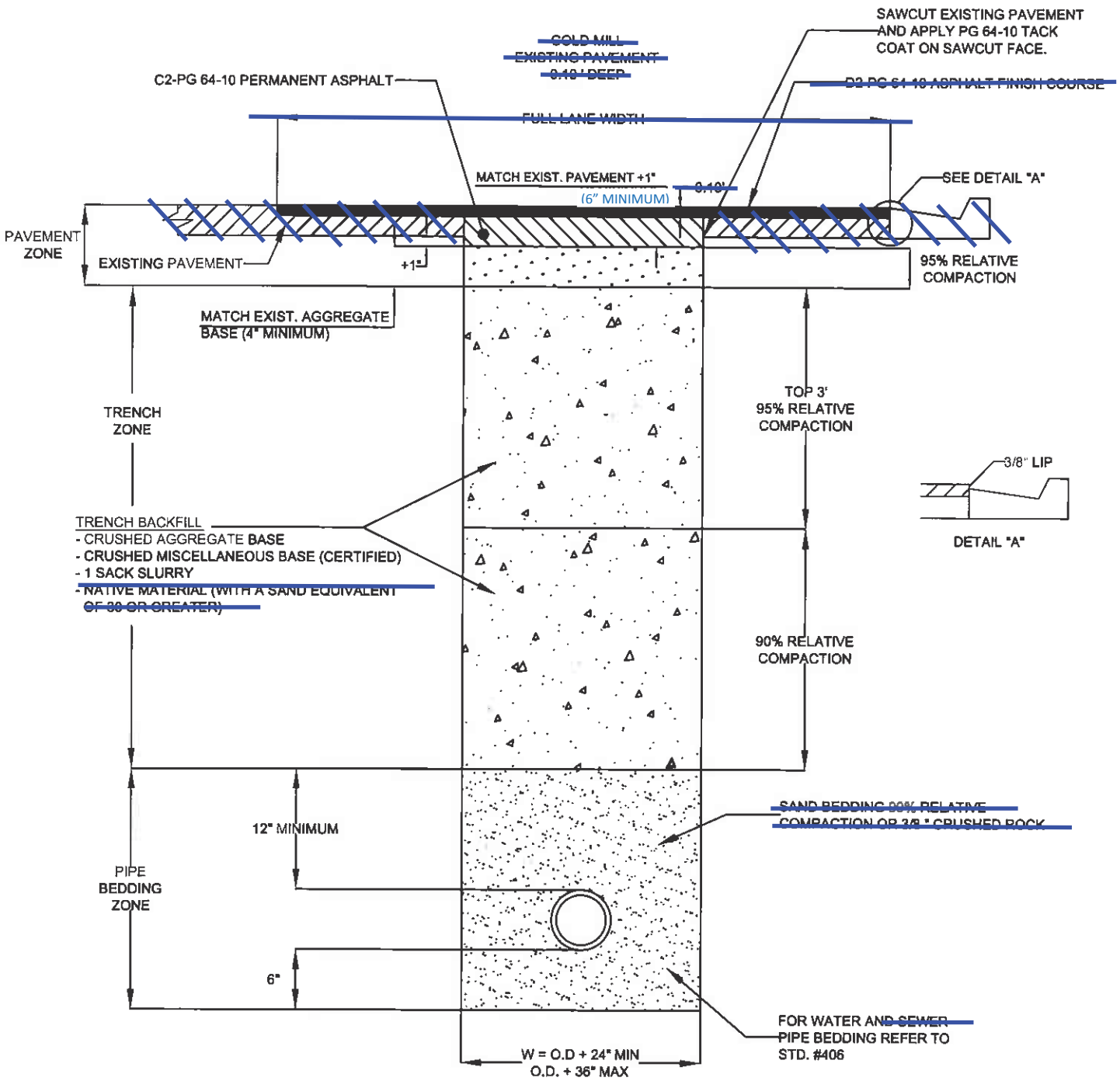

SEE SHEET 3 OF 3 FOR NOTES

REVISIONS:		
NO.	DATE	APPRV'D
1	3/31/10	KF
2	10/4/10	KF
3	6/24/10	KF
4	2/22/12	KF

APPROVED BY:

11-23-09

CITY ENGINEER — DATE

KIP D. FIELD

RCE NO. 45679 EXP. DATE 12-31-12

CITY OF CORONA

PARALLEL TRENCH BACKFILL AND ROADWAY REPAIR

STANDARD PLAN NUMBER: 150 SHT 2 OF 3

MODIFIED

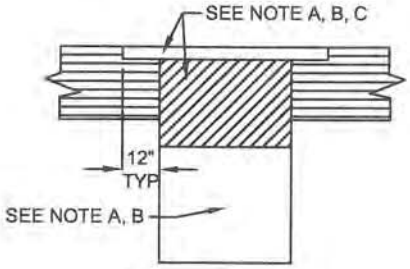

POTHOLE REPAIR

A. POTHOLE BACKFILL MAY BE COMPLETED USING COMPACTED NATIVE MATERIAL FOR POTHOLES THAT ARE 2' X 2' IN AREA OR LESS.
B. THE MATERIAL USED FOR BACKFILLING POTHOLES THAT ARE LARGER THAN 2' X 2' SHALL BE 95% COMPACTED CRUSHED AGGREGATE BASE (CAB) OR CMB AS APPROVED.
C. POTHOLES SHALL BE CAPPED USING C2-PG 64-10 PERMANENT ASPHALT WHICH IS 1" THICKER THAN THE EXISTING ASPHALT. IN ADDITION, ALL POTHOLES SHALL BE COLD MILLED 12" BEYOND ALL EDGES TO A DEPTH OF 0.1' AND CAPPED USING C2-PG 64-10 PERMANENT ASPHALT.

CITY OF CORONA REQUIREMENTS FOR TRENCHES OR OTHER EXCAVATIONS WITHIN PUBLIC RIGHTS-OF-WAY OR EASEMENTS

NOTES

1. ALL TRENCH EXCAVATIONS SHALL BE COMPLETED BY FIRST SAW-CUTTING THE PAVEMENT BEFORE EXCAVATION. ALL SAW CUT LINES SHALL BE CLEAN AND FREE OF ROUGH EDGES. ADDITIONAL SAW-CUTTING WILL BE REQUIRED BY THE PUBLIC WORKS INSPECTOR IF THE EDGES OF THE TRENCH ARE DAMAGED DURING EXCAVATION OR BACKFILLING OPERATIONS.
2. ALL COMPACTION OF TRENCH BACKFILL MATERIAL SHALL BE ACCOMPLISHED BY MECHANICAL METHODS. JETTING, PONDING OR FLOODING IN LIEU OF MECHANICAL METHODS SHALL NOT BE ALLOWED.
3. ALL TRENCHES SHALL BE BACKFILLED AND A MINIMUM OF 3" OF TEMPORARY ASPHALT PAVEMENT INSTALLED AT THE END OF EACH WORKDAY. THE PUBLIC WORKS INSPECTOR MAY AUTHORIZE STEEL PLATE BRIDGING IN ACCORDANCE WITH STANDARD #151 IN LIEU OF TEMPORARY ASPHALT PAVEMENT.
4. ALL TRAFFIC STRIPING OR MARKINGS REMOVED OR DAMAGED DURING CONSTRUCTION SHALL BE REPLACED AS DIRECTED BY THE PUBLIC WORKS INSPECTOR USING THERMOPLASTIC COATINGS. PARTIALLY REMOVED STRIPING SHALL BE REPLACED IN WHOLE.
5. PERMANENT PAVEMENT REPAIR SHALL BE ACCOMPLISHED WITHIN 14 DAYS OF TEMPORARY REPAIR BY REMOVAL OF ALL TEMPORARY AC PAVEMENT, INSTALLATION OF PERMANENT ASPHALT PAVEMENT AS NOTED ON THIS STANDARD, ~~AND COLD MILLING WITH FINISH PAVEMENT.~~
6. ~~COLD MILLING OF 0.10' SHALL BE REQUIRED FOR ALL TRENCHES.~~ THE PUBLIC WORKS INSPECTOR WILL REQUIRE ADDITIONAL COLD MILLING IF FIELD CONDITIONS SO WARRANT.
7. ~~ADDITIONAL COLD MILLING SHALL BE REQUIRED FOR TRENCHES THAT ARE 2' TO 4' FROM THE CURB & GUTTER.~~
8. REMOVE AND REPLACE ASPHALT PAVEMENT FULL DEPTH FOR TRENCHES THAT ARE 2' OR LESS FROM CURB & GUTTER.
9. TACK COAT OF PG 64-10 PAVING ASPHALT SHALL BE UNIFORMLY APPLIED TO EXISTING ASPHALT SURFACES PRECEDING PLACEMENT OF NEW ASPHALT CONCRETE. THE SURFACE SHALL BE FREE OF WATER, FOREIGN MATERIAL, OR DUST WHEN THE TACK COAT IS APPLIED.
10. FOR WATER, PIPE BEDDING REQUIREMENTS REFER TO CITY STD #406. FOR SEWER, PIPE BEDDING REQUIREMENTS REFER TO CITY STD #308.
11. TESTING: COMPACTION REPORTS SHALL BE SUBMITTED TO THE CITY ENGINEER.
12. PROHIBITION OF PAVEMENT CUTTING: ASPHALT CONCRETE PAVEMENT LESS THAN THREE (3) YEARS OLD SHALL NOT BE CUT EXCEPT FOR EMERGENCY REPAIRS OR AS SPECIFICALLY APPROVED IN WRITING BY THE CITY ENGINEER. SPECIAL REQUIREMENTS WILL BE IMPOSED FOR REPAVING.

REVISIONS:		
NO.	DATE	APPRV'D
1	3/31/10	KF
2	10/4/10	KF
3	6/21/10	KF
4	2/22/12	KF
5	12/26/13	MM

APPROVED BY:

CITY ENGINEER — 11-23-09 DATE

KIP D. FIELD

RCE NO. 45679

CITY OF CORONA

TRENCH BACKFILL AND ROADWAY REPAIR

STANDARD PLAN NUMBER: 150 SHT 3 OF 3

MODIFIED

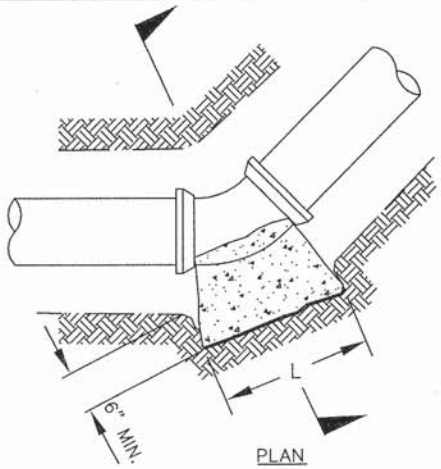

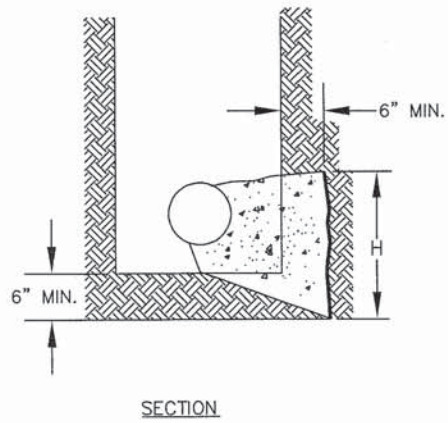

HORIZONTAL BEND

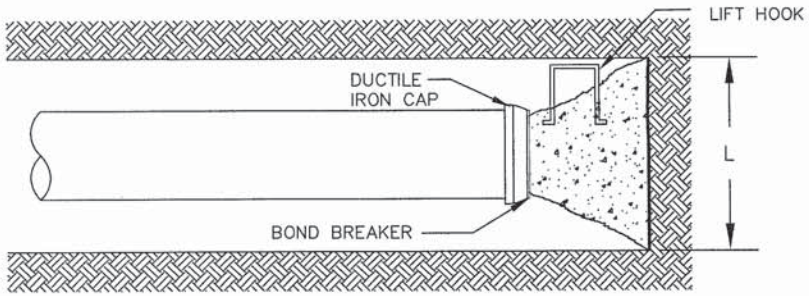

END OF LINE

GENERAL NOTES:

1. INSTALL CONCRETE THRUST BLOCKS ONLY WHEN APPROVED BY DWP GENERAL MANAGER OR DESIGNEE.
2. THRUST BLOCK BEARING AREA BASED ON ALLOWABLE SOIL BEARING VALUE OF 1500 PSF PRESSURE, 200 PSI LINE PRESSURE WITH THREE FEET COVER MINIMUM, AND A MINIMUM SAFETY FACTOR OF 1.5.
   FOR BEARING = 2000 PSF, 0.75 X AREA SHOWN
   FOR BEARING = 1000 PSF, 1.5 X AREA SHOWN
   FOR BEARING = 500 PSF, 3.0 X AREA SHOWN
3. ALL THRUST BLOCKS SHALL BE PORTLAND CEMENT CONCRETE MIX 560-C-3250 PLACED AGAINST UNDISTURBED SOIL AND CENTERED VERTICALLY AND HORIZONTALLY ABOUT THE DIRECTION OF THRUST.
4. KEY THRUST BLOCKS ON REDUCERS INTO THE TRENCH BOTTOM AS SHOWN.
5. DO NOT EXTEND CONCRETE ONTO FLANGE OR ADJOINING PIPE.
6. DO NOT COVER FITTING BOLTS WITH CONCRETE.
7. WHEN VALVES ARE FLANGED TO FITTINGS AVOID PLACING CONCRETE ON ANY PART OF THE VALVE BONNET OR VALVE OPERATOR.
8. COAT REBAR WITH 80 MILS OF COLD-APPLIED BITUMASTIC WATER-PROOFING COMPOUND. WRAP EXTERIOR OF VALVE, ACTUATOR AND FITTING WITH 2 LAYERS OF 8 MIL POLYETHYLENE SHEETING AND TAPE.
9. PROVIDE 3-INCH MINIMUM CONCRETE COVER OVER REBAR.
10. DO NOT PLACE CONCRETE ON VALVE OR PIPE JOINT.
11. YIELD STRENGTH OF STEEL BARS IS ASSUMED TO BE 36 KSI.
12. CONSULT STRUCTURAL ENGINEER FOR CASES NOT SHOWN.
13. THRUST BLOCK REQUIREMENTS FOR PIPE LARGER THAN 18-INCH OR OPERATING PRESSURE GREATER THAN 175 PSI REQUIRE SUBMITTAL OF DETAIL CALCULATIONS TO DWP GENERAL MANAGER OR DESIGNEE FOR APPROVAL.
14. FORM ALL CONCRETE THRUST BLOCKS.

PIPE SIZE	11 1/4° BEND				22 1/2° BEND				45° BEND				90° BEND				END OF LINE			
	L (IN)	H (IN)	AREA (FT^2)	THRUST (LBS)	L (IN)	H (IN)	AREA (FT^2)	THRUST (LBS)	L (IN)	H (IN)	AREA (FT^2)	THRUST (LBS)	L (IN)	H (IN)	AREA (FT^2)	THRUST (LBS)	L (IN)	H (IN)	AREA (IN^2)	THRUST (LBS)
4"	13	8	0.7	1064	18	11	1.4	2118	25	16	2.8	4155	34	22	5.1	7677	29	18	3.6	5429
6"	18	12	1.5	2199	26	16	2.9	4377	36	23	5.7	8586	49	31	10.6	15864	41	26	7.5	11218
8"	24	15	2.5	3782	34	22	5.0	7530	47	30	9.8	14771	64	41	18.2	27291	54	34	12.9	19298
10"	29	19	3.8	5690	41	26	7.6	11328	58	37	14.8	22220	78	50	27.4	41055	66	42	19.4	29031
12"	35	22	5.4	8047	49	31	10.7	16019	69	44	20.9	31423	93	60	38.7	58059	78	50	27.4	41054
16"	46	29	9.3	13982	65	41	18.6	27835	90	58	36.4	54601	123	79	67.3	100884	103	66	47.6	71336
18"	51	33	11.7	17561	72	46	23.3	34960	101	65	45.7	68576	138	88	84.5	126705	116	74	59.7	89595

CONCRETE THRUST BLOCK DETAILS

REVISION		
NO.	APPROVED	DATE

APPROVED:
Nelson D. Nelson 11-21-12
NELSON D. NELSON, PE. DATE
CITY ENGINEER
Tom Koper 11-20-12
TOM KOPER, PE, DISTRICT ENGINEER, DATE
DEPARTMENT OF WATER AND POWER

CITY OF CORONA

STD 401

SHEET 1 OF 4

FILE: G:\ENGINEERING\STANDARDS\2012 DWP STANDARDS\2012 STANDARD PLANS\STD_401A.DWG

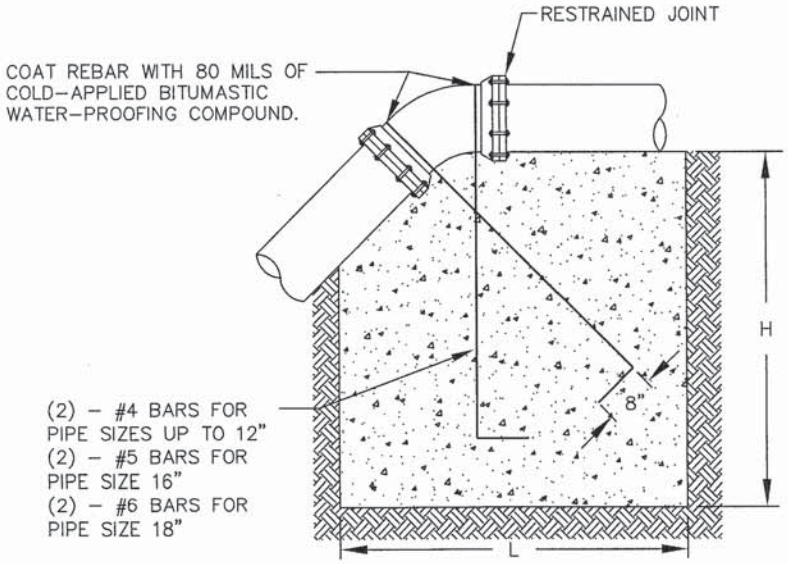

SECTION

VERTICAL BEND ANCHOR

INSTALL CONCRETE THRUST BLOCKS ONLY WHEN APPROVED BY DWP GENERAL MANAGER OR DESIGNEE

VERTICAL BEND ANCHOR												
PIPE SIZE	11 1/4° BEND L,H, AND W(IN)	VOLUME (YD^3)	THRUST (LBS)	22 1/2° BEND L,H, AND W(IN)	VOLUME (YD^3)	THRUST (LBS)	45° BEND L,H, AND W(IN)	VOLUME (YD^3)	THRUST (LBS)	90° BEND L,H, AND W(IN)	VOLUME (YD^3)	THRUST (LBS)
4"	23	0.3	1064	29	0.5	2118	36	1.0	4155	40	1.4	7677
6"	30	0.6	2199	37	1.1	4377	46	2.0	8586	51	2.9	15864
8"	36	1.0	3782	45	1.9	7530	55	3.5	14771	61	5.0	27291
10"	41	1.5	5690	51	2.9	11328	63	5.3	22220	70	7.5	41055
12"	46	2.1	8047	57	4.0	16019	70	7.5	31423	79	10.6	58059
16"	55	3.6	13982	69	7.0	27835	85	13.0	54601	95	18.3	100884
18"	59	4.5	17561	74	8.8	34960	91	16.3	68576	102	23.0	126705

CONCRETE THRUST BLOCK DETAILS

REVISION		
NO.	APPROVED	DATE

APPROVED:

NELSON D. NELSON, PE, CITY ENGINEER — DATE 11-21-12

TOM KOPER, PE, DISTRICT ENGINEER, DEPARTMENT OF WATER AND POWER — DATE 11-20-12

CITY OF CORONA

STD 401

SHEET 2 OF 4

FILE: G:\ENGINEERING\STANDARDS\2012 DWP STANDARDS\2012 STANDARD PLANS\STD_401B.DWG

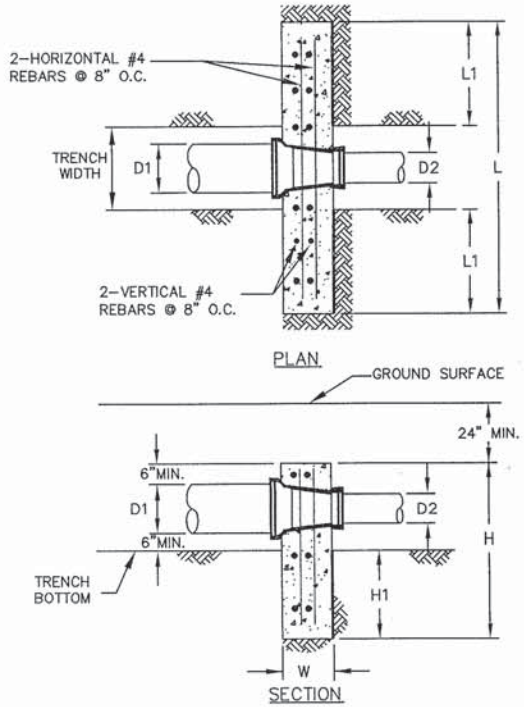

REDUCER

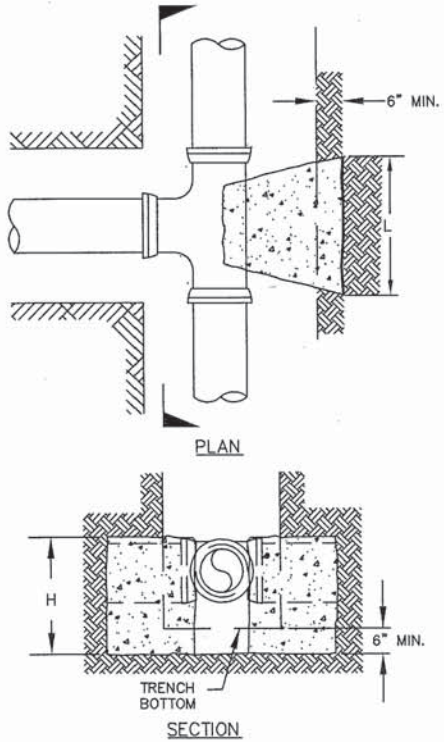

TEE

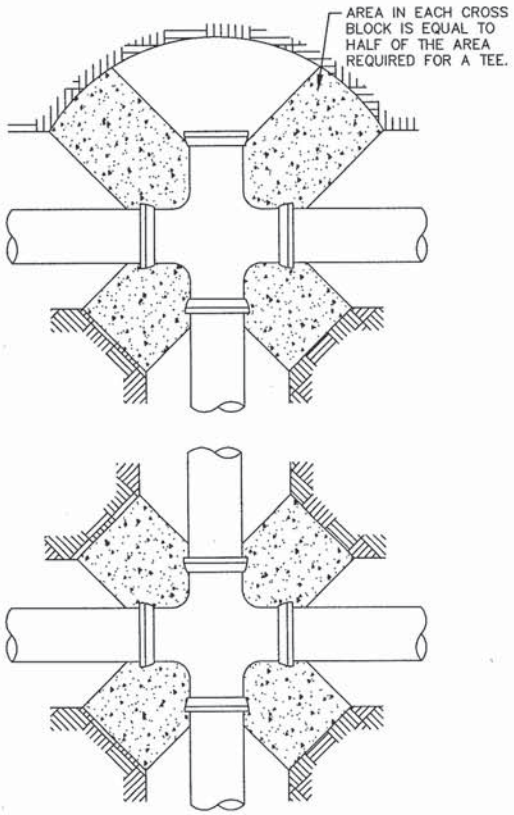

CROSS BLOCKING

D1xD2 (IN)	REDUCER								
	TRENCH WIDTH* (IN)	L (IN)	H (IN)	H1 (IN)	L1 (IN)	W (IN)	TOTAL AREA INCLD. TRENCH (FT^2)	MIN. BEARING AREA** (FT^2)	THRUST (LBS)
18X16	36	66	44	12	15	16	20	12.2	18258
18X12	36	93	62	30	29	16	40	32.4	48540
18X10	36	102	68	36	33	16	48	40.4	60564
18X8	36	109	73	41	36	14	55	46.9	70297
16X12	36	77	52	22	21	14	28	20.2	30282
16X10	36	88	59	29	26	14	36	28.2	42306
16X8	36	95	64	34	30	12	42	34.7	52038
12X10	30	54	36	10	12	12	13	8.0	12024
12X8	30	66	44	18	18	12	20	14.5	21757
12X6	30	74	49	23	22	12	25	19.9	29837
12X4	30	79	53	27	25	10	29	23.8	35626
10X8	30	50	33	9	10	10	11	6.5	9733
10X6	30	60	40	16	15	10	17	11.9	17813
10X4	30	67	45	21	18	10	21	15.7	23602
8X6	24	44	29	7	10	10	9	5.4	8080
8X4	24	53	35	13	14	8	13	9.2	13869
6X4	24	39	26	6	8	8	7	3.9	5789

* IF A DIFFERENT TRENCH WIDTH IS USED, THE THRUST BLOCK SHALL MAINTAIN THE MINIMUM BEARING AREA SHOWN.
** BEARING AREA REQUIRED ON UNDISTURBED SOIL OUTSIDE OF TRENCH.

PIPE SIZE	TEE			
	L (IN)	H (IN)	AREA (FT^2)	THRUST (LBS)
4"	29	18	3.6	5429
6"	41	26	7.5	11218
8"	54	34	12.9	19298
10"	66	42	19.4	29031
12"	78	50	27.4	41054
16"	103	66	47.6	71336
18"	116	74	59.7	89595

INSTALL CONCRETE THRUST BLOCKS ONLY WHEN APPROVED BY DWP GENERAL MANAGER OR DESIGNEE

CONCRETE THRUST BLOCK DETAILS

REVISION		
NO.	APPROVED	DATE

APPROVED:
Nelson D. Nelson 11-21-12
NELSON D. NELSON, PE. CITY ENGINEER — DATE
Tom Koper 11-20-12
TOM KOPER, PE. DISTRICT ENGINEER, DEPARTMENT OF WATER AND POWER — DATE

CITY OF CORONA

STD 401

SHEET 3 OF 4

FILE: G:\ENGINEERING\STANDARDS\2012 DWP STANDARDS\2012 STANDARD PLANS\STD_401C.DWG

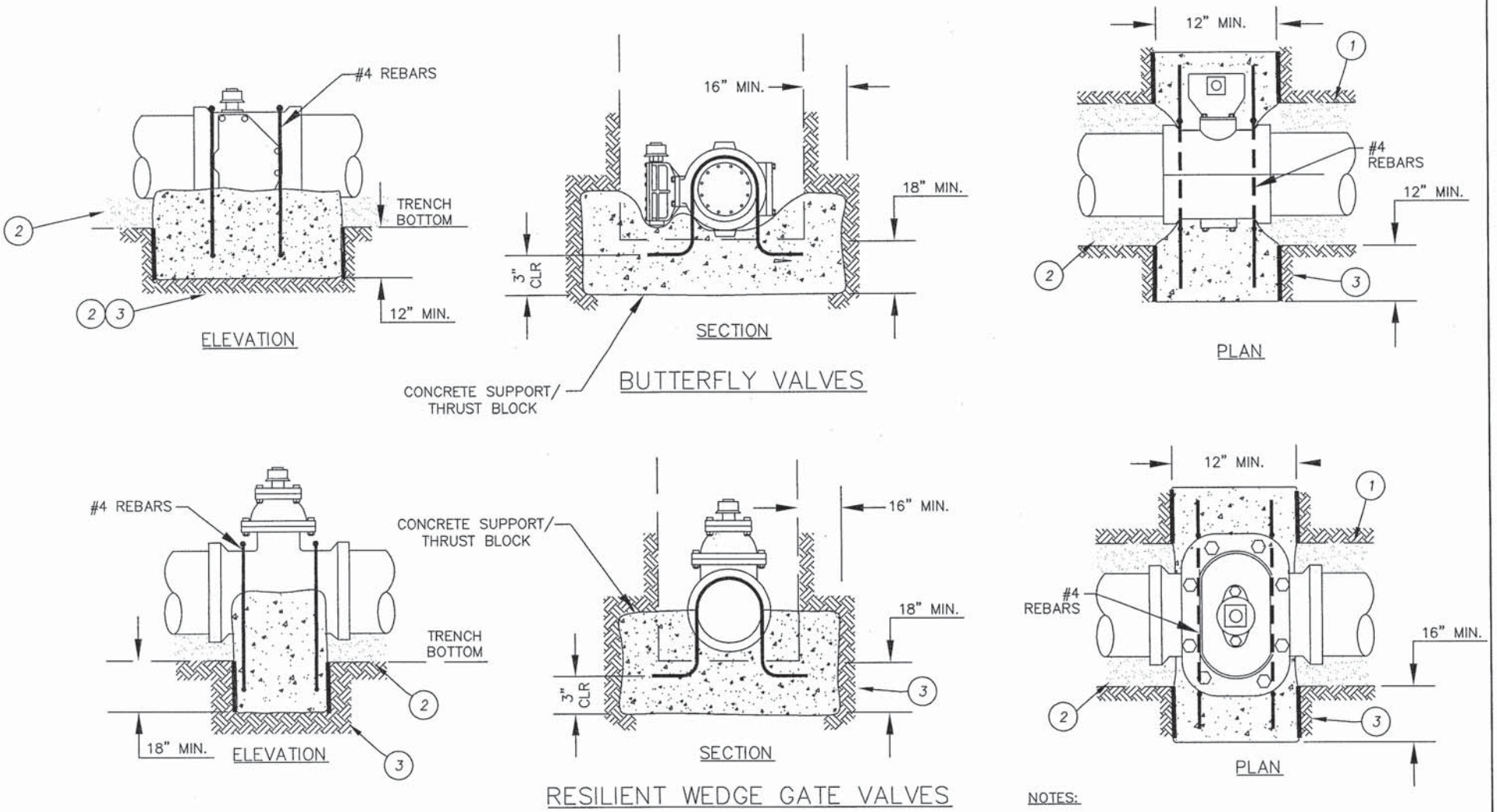

NOTES:

1. PROVIDE CONCRETE SUPPORT THRUST BLOCK FOR ALL BURIED VALVES.
2. ENGINEER SHALL PROVIDE CALCULATIONS FOR SIZING ANCHORS LARGER THAN 8 INCHES OR PIPELINES EXCEEDING 250 PSI OPERATING PRESSURE.

INSTALL CONCRETE THRUST BLOCKS ONLY WHEN APPROVED BY DWP GENERAL MANAGER OR DESIGNEE

ITEM	MATERIALS
1	BOUNDARY OF TRENCH.
2	PIPE BEDDING PER CITY STD. DWG. 406.
3	UNDISTURBED EARTH WITH MINIMUM 1500 LB/SF BEARING CAPACITY.

CONCRETE THRUST BLOCK DETAILS

REVISION		
NO.	APPROVED	DATE

APPROVED:
NELSON D. NELSON, PE. CITY ENGINEER — DATE 11-21-12
TOM KOPER, PE. DISTRICT ENGINEER, DEPARTMENT OF WATER AND POWER — DATE 11-20-12

CITY OF CORONA

STD 401

SHEET 4 OF 4

FILE: G:\ENGINEERING\STANDARDS\2012 DWP STANDARDS\2012 STANDARD PLANS\STD_401D.DWG

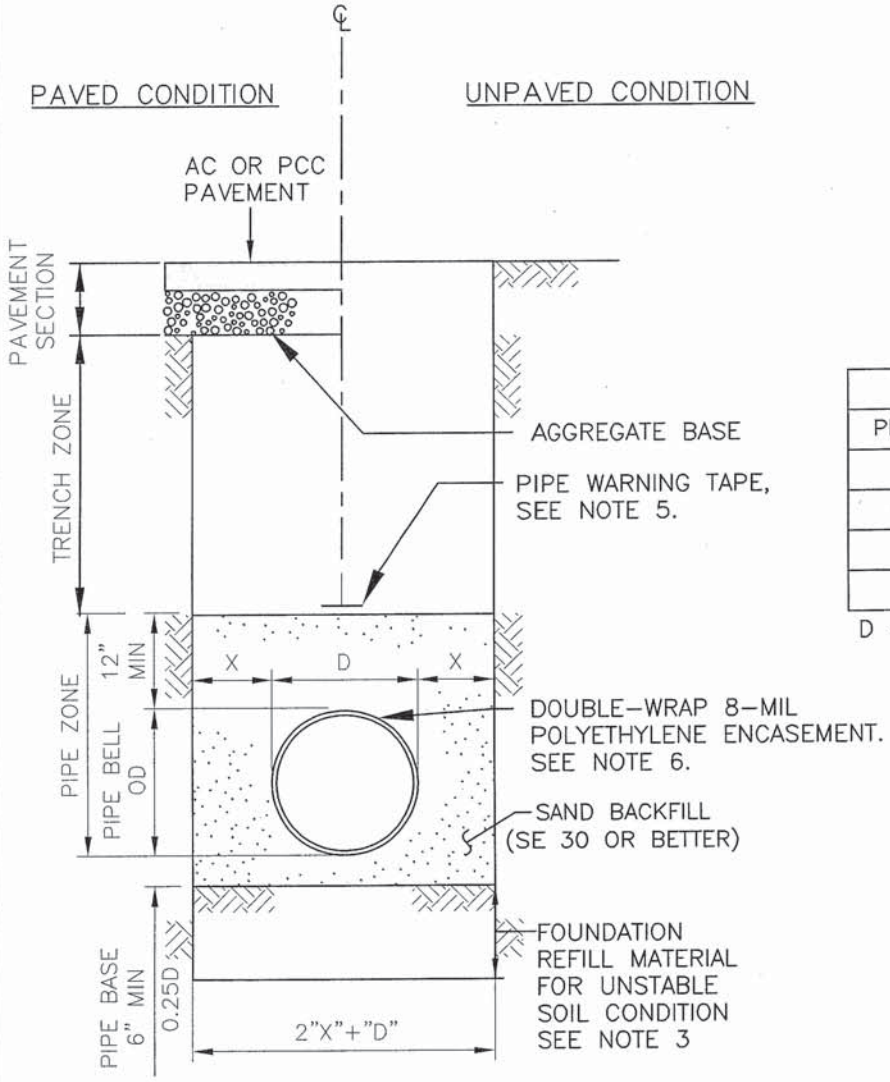

TRENCH WIDTH DIMENSIONS		
PIPE DIA. "D"	MAXIMUM "X"	MINIMUM "X"
4"–6"	8"	6"
8"–21"	12"	8"
24"–48"	.33D+4"	12"
>48"	20"	12"

D = OUTSIDE DIAMETER OF PIPE BELL

NOTES:

1. CONSTRUCT TRENCH ZONE AND PAVEMENT SECTION PER STD. DWG. 150 OR GOVERNING AGENCY REQUIREMENTS IF OUTSIDE CITY OF CORONA.
2. WHERE CONTRACTOR FAILS TO MAINTAIN PROPER TRENCH WIDTH LIMITS, SPECIAL BACKFILL SUCH AS ONE-SACK SLURRY AND BEDDING WILL BE REQUIRED BY THE DWP GENERAL MANAGER OR DESIGNEE.
3. IF UNSTABLE SOIL IS ENCOUNTERED, THE DWP GENERAL MANAGER OR DESIGNEE WILL DETERMINE OVER-EXCAVATION DEPTH AND FOUNDATION RE-FILL MATERIAL REQUIREMENTS.
4. PROVIDE HAND EXCAVATED "BELL HOLE" FOR EACH PIPE JOINT SO THE WEIGHT OF PIPE DOES NOT BEAR ON THE BELL. RE-FILL AND HAND-TAMP EACH "BELL HOLE" PRIOR TO COMPLETING THE PLACEMENT OF PIPE BEDDING.
5. INSTALL BLUE 6-INCH WIDE PIPE WARNING TAPE LABELED POTABLE WATER ABOVE POTABLE WATER PIPE. INSTALL PURPLE 6-INCH WIDE PIPE WARNING TAPE LABELED RECLAIMED WATER ABOVE RECLAIMED WATER PIPE.
6. BLUE POLYETHYLENE ENCASEMENT FOR POTABLE WATER PIPING. PURPLE POLYETHYLENE ENCASEMENT FOR RECLAIMED WATER PIPING.

WATER PIPE BEDDING AND TRENCH DETAILS

REVISION		
NO.	APPROVED	DATE

APPROVED:

Nelson D. Nelson — 11-26-2012 DATE
NELSON D. NELSON, PE, CITY ENGINEER

Tom Koper — 11-20-12 DATE
TOM KOPER, PE, DISTRICT ENGINEER, DEPARTMENT OF WATER AND POWER

CORONA "THE CIRCLE CITY" Incorporated July 13, 1896 — Cherish Our Past - To Pave Our Future

CITY OF CORONA

STD 406

SHEET 1 OF 1

FILE: G:\ENGINEERING\STANDARDS\2012 DWP STANDARDS\2012 STANDARD PLANS\STD_406.DWG

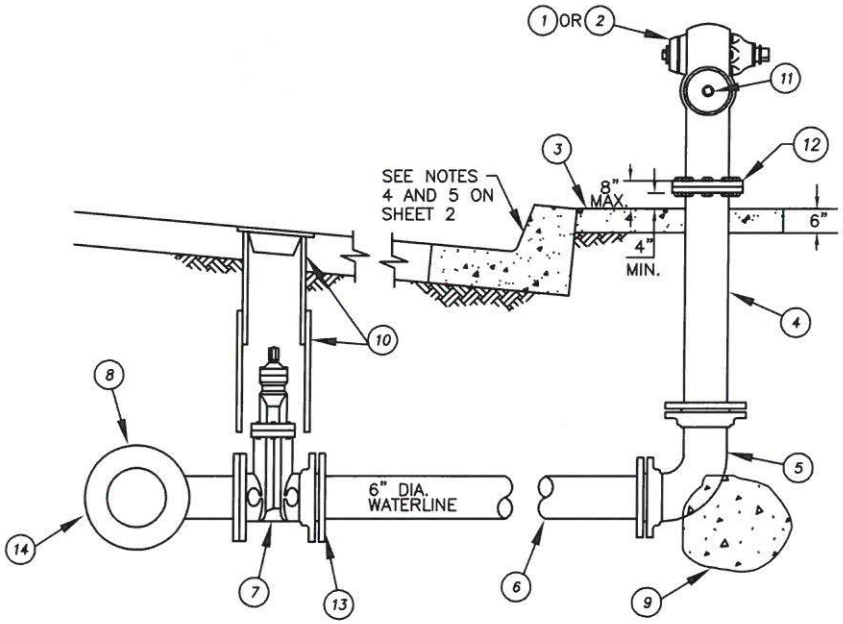

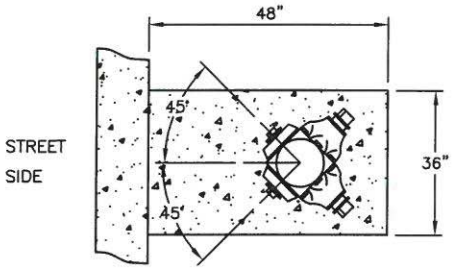

FIRE HOSE OUTLET ORIENTATION

ITEM	MATERIALS
1	RESIDENTIAL HYDRANT, 8-HOLE PATTERN, WITH (1) 4-INCH AND (1) 2-1/2-INCH FIRE HOSE OUTLETS, CLOW 850 OR 2050, OR JAMES JONES 3710 OR 4040B. PAINT FIRE HYDRANT AND CAPS RUST-O-LEUM OLD CAT YELLOW - 76486.
2	NON-RESIDENTIAL HYDRANT, 8-HOLE PATTERN, WITH (2) 4-INCH AND (1) 2-1/2-INCH FIRE HOSE OUTLETS, CLOW 860, 850, OR 2065, OR JAMES JONES 3765, 3775, OR 4060B. PAINT FIRE HYDRANT AND CAPS RUST-O-LEUM OLD CAT YELLOW - 76486.
3	REPLACE SIDEWALK PER CITY STD. 103-00 OR CONSTRUCT 48-INCHx36-INCHx6-INCH THICK CONCRETE PAD WITHIN PARKWAY. SEE HYDRANT LOCATION PLANS BELOW FOR APPLICABLE CONDITION.
4	6-INCH DIA. FLG X PE DI SPOOL, CLASS 350.
5	6-INCH DIA. MJ DI 90° BEND, RESTRAINED.
6	6-INCH DIA. DI PIPE, CLASS 350, RESTRAINED JOINT.
7	6-INCH RESILIENT WEDGE GATE VALVE FLG X MJ RESTRAINED PER CITY STD. DWG. 420.
8	DI TEE WITH 6-INCH FLANGED OUTLET.
9	CONCRETE SUPPORT BLOCK PER CITY STD. DWG. 401.
10	VALVE BOX PER CITY STD. DWG. 422.
11	FIRE HYDRANT CAPS, PLASTIC W/O CHAINS.
12	BREAK-OFF BOLTS. 5/8-INCH X 3-INCH W/ BOLTS UP. 8-HOLE PATTERN, PRE-FILLED BOLTS WITH SILICONE INSTALLED UP.
13	MJ PIPE RESTRAINT, EBBA IRON MEGALUG SERIES 1100.
14	MAINLINE SIZE X 6-INCH MJ X MJ X FLG TEE WITH RESTRAINED JOINTS AND CONCRETE THRUST BLOCK PER CITY STD. DWG. 401 UPON DWP GENERAL MANAGER OR DESIGNEE APPROVAL.

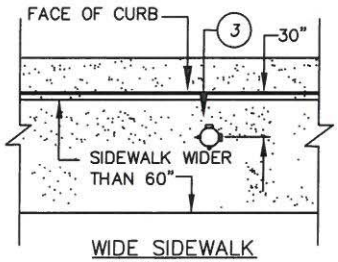

WIDE SIDEWALK CONDITION 1
(ONLY BY APPROVAL OF DWP GENERAL MANAGER OR DESIGNEE)

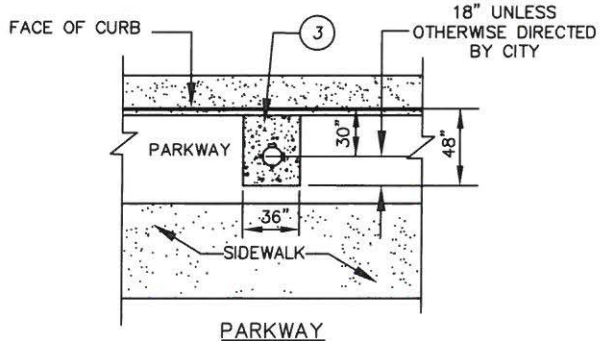

PARKWAY CONDITION 3

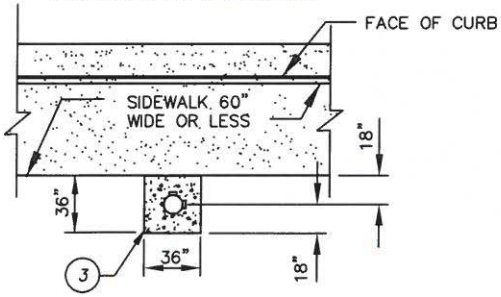

NARROW SIDEWALK CONDITION 2

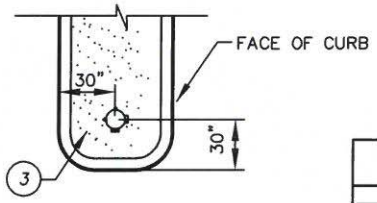

MEDIAN CONDITION 4

HYDRANT LOCATION PLANS

NOTES:

1. DO NOT CONSTRUCT FIRE HYDRANT CLOSER THAN 10-FEET TO DRIVEWAY RETURN WITHOUT PRIOR APPROVAL BY DWP GENERAL MANAGER OR DESIGNEE.

FIRE HYDRANT INSTALLATION

REVISION		
NO.	APPROVED	DATE
1	VRW	02/13/14

APPROVED:

NELSON D. NELSON, PE, CITY ENGINEER — DATE 3-10-14

TOM KOPER, PE, DISTRICT ENGINEER, DEPARTMENT OF WATER AND POWER — DATE 2-14-14

CITY OF CORONA

STD 412

SHEET 1 OF 2

FILE: G:\ENGINEERING\STANDARDS\2012 DWP STANDARDS\2012 STANDARD PLANS\STD_412A.DWG

NOTES:

1. FLANGE NUTS, BOLTS, AND WASHERS SHALL BE TYPE 316SS. LUBRICATE BOLTS WITH ANTI-SEIZE LUBRICANT.
2. CONSTRUCT CONCRETE THRUST BLOCK ON MAINLINE TEE PER CITY STD. DWG. 401 WHERE WATER MAIN IS NOT OTHERWISE FULLY RESTRAINED.
3. DIMENSIONS MAY VARY FOR SPECIAL CIRCUMSTANCES; CUL-DE-SACS, PRIVATE STREETS, SIDEWALKS ADJACENT TO CURBS, ETC. WHERE SPECIFICALLY REQUIRED ON THE APPROVED PLANS.
4. CHISEL A 1-1/2-INCH TALL "V" IN THE CURB FACE TO INDICATE LOCATION OF VALVE.
5. CHISEL (2) "X"'S AND THEIR RESPECTIVE DISTANCES IN THE CURB TO BE USED AS "TIE" LOCATIONS FOR VALVE CAN.
6. VALVE SHALL BE ACCESSIBLE AT ALL TIMES.
7. DEVELOPER/INSTALLER SHALL SUPPLY AND PLACE BLUE-DOT REFLECTING RAISED ROADWAY MARKERS PER CITY STD. DWG. 531.
8. BORE UNDER CURB & GUTTER FOR CONSTRUCTION OF HYDRANT LATERAL.
9. PROVIDE 3-FOOT MINIMUM HORIZONTAL CLEARANCE BETWEEN FIRE HYDRANT AND ALL OTHER ADJACENT ABOVE GROUND IMPROVEMENTS.
10. PROVIDE 1-1/2-INCH OPERATING NUTS ON ALL FIRE HYDRANT OPERATORS.
11. WRAP PIPE AND VALVE WITH A DOUBLE LAYER OF 8-MIL BLUE POLYETHYLENE.

FIRE HYDRANT INSTALLATION

REVISION		
NO.	APPROVED	DATE
1	VPW	2/13/14

APPROVED:

NELSON D. NELSON, PE, CITY ENGINEER — DATE 3-10-14

TOM KOPER, PE, DISTRICT ENGINEER, DEPARTMENT OF WATER AND POWER — DATE 2-14-14

CITY OF CORONA

STD 412

SHEET 2 OF 2

FILE: G:\ENGINEERING\STANDARDS\2012 DWP STANDARDS\2012 STANDARD PLANS\STD_412B.DWG

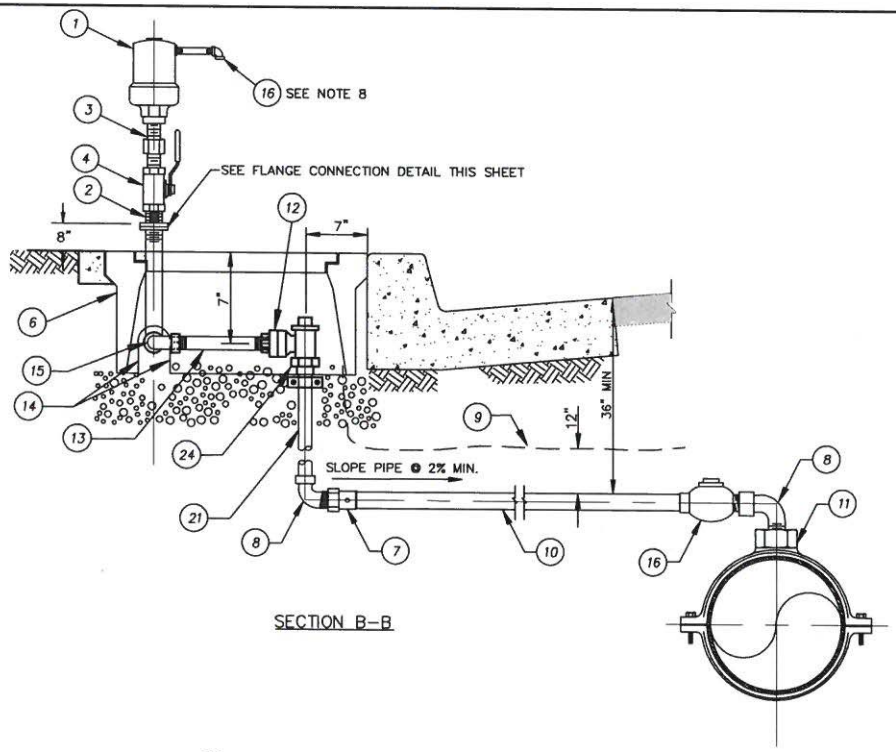

SECTION B–B

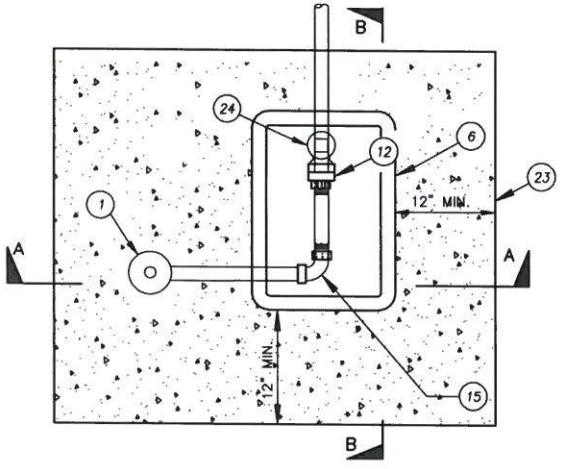

PLAN

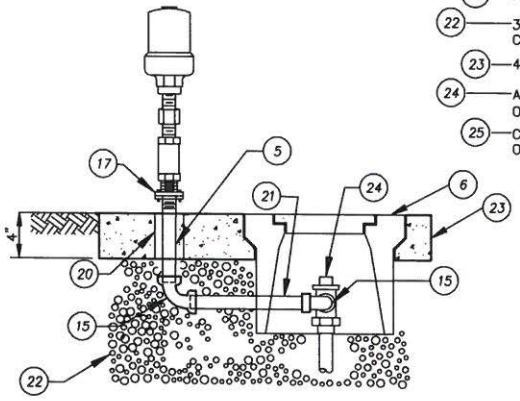

SECTION A–A

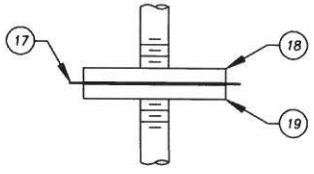

FLANGE CONNECTION

ITEM	MATERIALS
1	1–INCH OR 2–INCH COMBINATION AIR & VACUUM RELIEF VALVE, ROLLING SEAL STYLE ARI D–040C.
2	1–INCH OR 2–INCH TYPE 316SS NIPPLE MIPT X FLG.
3	1–INCH OR 2–INCH EXTRA HEAVY HEX HEAD, TYPE 316SS.
4	1–INCH OR 2–INCH TYPE 316SS BALL VALVE W/ LOCKABLE HANDLE.
5	2–INCH BRASS NIPPLE MIPT X FLG.
6	POLYMER CONCRETE METER BOX PER CITY STD. DWG. 414. READING LID NOT REQUIRED.
7	2–INCH COPPER ADAPTER (COMP X FIP) MUELLER H15451 OR EQUAL.
8	2–INCH 90–DEGREE BRASS STREET ELBOW.
9	6–INCH BLUE WARNING TAPE LABELED "POTABLE WATER" ABOVE AIR/VAC SERVICE LATERAL.
10	2–INCH COPPER SERVICE PIPE, TYPE "K" RIGID. PRIOR TO INSTALLATION, COPPER PIPE SHALL BE ROUNDED AND DE–BURRED.
11	DOUBLE STRAP BRASS SADDLE: FORD STYLE 202BSD, MUELLER BR2S AND BR2W SERIES, OR JAMES JONES J–969 SERIES FOR AC, CIP, DIP AND PVC PIPES. FORD STYLE 202B, MUELLER BR2B SERIES, OR JAMES JONES J–979 SERIES FOR DIP.
12	2–INCH METER NUT BY FIPT ADAPTER.
13	2–INCH BRASS NIPPLE, THREADED BOTH ENDS, 6–INCHES LONG.
14	SAWCUT OR CORE DRILL METER BOX FOR 2–INCH PIPE.
15	2–INCH BRASS 90–DEGREE BEND FIPT X FIPT.
16	TYPE 316SS SCREEN.
17	FLANGE INSULATING KIT PER CITY STD. DWG. 458.
18	TYPE 316SS COMPANION FLANGE.
19	BRASS COMPANION FLANGE.
20	3–INCH SCH. 80 PVC SLEEVE.
21	2–INCH BRASS NIPPLE, THREADED BOTH ENDS.
22	3/4–INCH CRUSHED ROCK PLACE TO DEPTH 6–INCHES BELOW CONCRETE METER BOX.
23	4–INCH THICK 560–C–3250 CONCRETE.
24	ANGLE METER STOP (BALL VALVE): JONES E19966W, FORD KV43–444W, OR MUELLER B–24265N OR B–24286N "LOCK ON" STYLE.
25	CORPORATION STOP (BALL VALVE), JONES E1935SG, FORD FB1100–4–Q OR 6–Q, OR MUELLER B–25028.

NOT TO SCALE

SEE AIR AND VACUUM RELEASE LOCATION PLANS ON SHEET 2

1" OR 2" COMBINATION AIR AND VACUUM RELEASE

REVISION		
NO.	APPROVED	DATE
1	VRW	2/13/14
2	VRW	4/30/14

APPROVED:

NELSON D. NELSON, PE, CITY ENGINEER — DATE 9-18-14

TOM KOPER, PE, DISTRICT ENGINEER, DEPARTMENT OF WATER AND POWER — DATE 9-18-14

CITY OF CORONA

STD 413

SHEET 1 OF 2

FILE: G:\ENGINEERING\STANDARDS\2012 DWP STANDARDS\2012 STANDARD PLANS\STD_413A_REV2.DWG

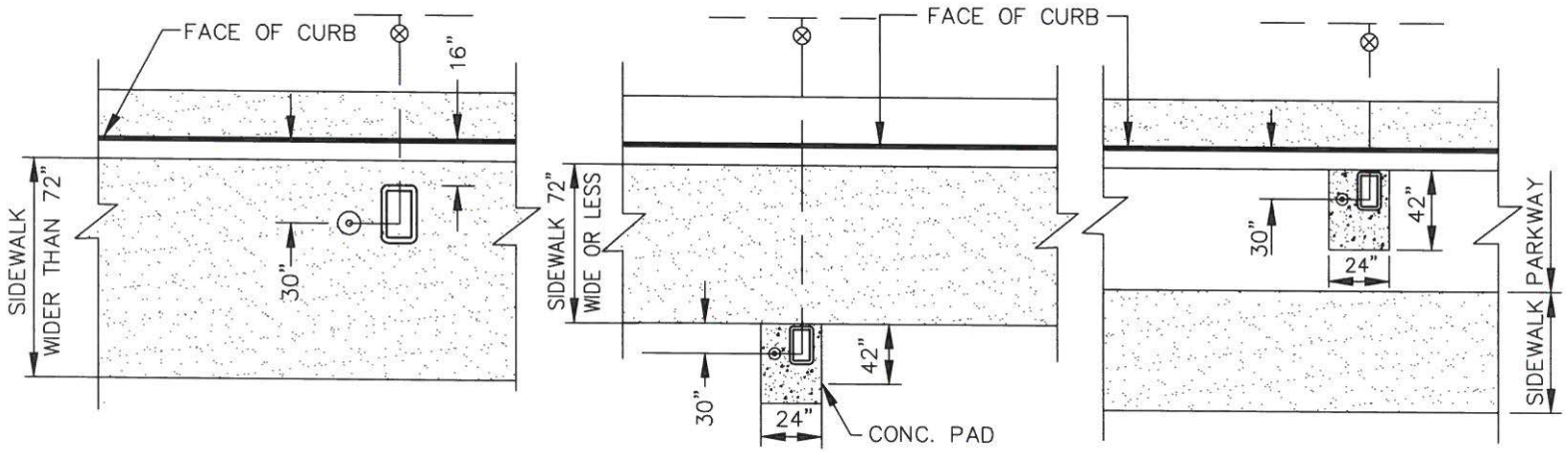

CASE 1
(ONLY BY APPROVAL OF DWP GENERAL MANAGER OR DESIGNEE)

CASE 2

CASE 3

NOTES:

1. WRAP SERVICE SADDLE AND CORP STOP WITH 8-MIL BLUE POLYETHYLENE.
2. PAINT ABOVE GRADE PORTION OF AIR/VAC ASSEMBLY HUNTER GREEN.
3. ENCASE COPPER AND BRASS PIPING SERVICE TO 1/2-INCH ABOVE FINISH GRADE WITH TWO 8-MIL BLUE POLYETHYLENE SLEEVES (DOUBLE-WRAP).
4. POSITION ASSEMBLY PER APPLICABLE CASE 1, 2 OR 3 AS SHOWN HEREON.
5. THE CITY WILL DETERMINE IF 1-INCH OR 2-INCH ASSEMBLY IS TO BE INSTALLED. REFER TO PROJECT PLANS.
6. MARK VALVE LOCATION AND DISTANCES TO TWO POINTS ON ADJACENT CURB USING A 4-INCH WHEEL GRINDER.
7. FILL ANNULAR SPACE IN SLEEVE WITH SAND.
8. INCREASE THE DISTANCE BETWEEN THE AIR/VAC VALVE AND SCREEN TO EXTEND FARTHER THAN THE FLANGE.

NOT TO SCALE

1" OR 2" COMBINATION AIR AND VACUUM RELEASE

REVISION		
NO.	APPROVED	DATE
1	VRW	2/13/14
2	VRW	4/30/14

APPROVED:
NELSON D. NELSON, PE, CITY ENGINEER — DATE 5-6-14
TOM KOPER, PE, DISTRICT ENGINEER, DEPARTMENT OF WATER AND POWER — DATE 4-30-14

CITY OF CORONA
STD 413
SHEET 2 OF 2

FILE: G:\ENGINEERING\STANDARDS\2012 DWP STANDARDS\2012 STANDARD PLANS\STD_413B_REV2.DWG

NOTES:

1. THE CONTRACTOR IS RESPONSIBLE FOR THE COMPLETE SERVICE CONNECTION AS SHOWN ON THIS STANDARD PLAN EXCEPT FOR THE WATER METER. THE CITY WILL PROVIDE AND INSTALL THE WATER METER.
2. THE WATER SERVICE SHALL EXTEND PERPENDICULAR TO THE CENTERLINE OF THE STREET FROM THE WATER MAIN TO THE METER STOP.
3. LOCATIONS SHOWN FOR WATER METER BOX AND POTABLE WATER SERVICE ARE DIAGRAMMATIC AND MAY BE REVISED TO SUIT EACH PROPERTY.

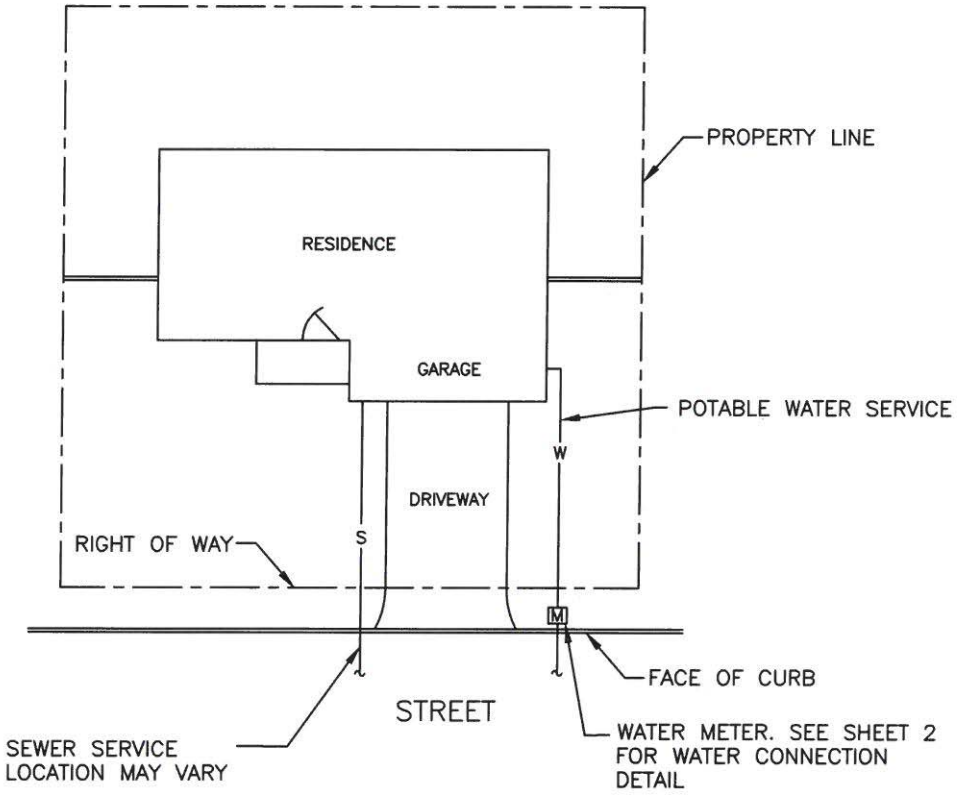

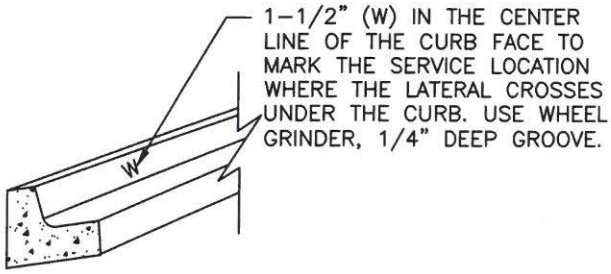

NOT TO SCALE

1" WATER SERVICE CONNECTION DETAIL WITHOUT FIRE SPRINKLER SERVICE

REVISION		
NO.	APPROVED	DATE
1	VPW	2/13/14
2	VPW	4/30/14

APPROVED:

NELSON D. NELSON, PE, CITY ENGINEER — DATE: 5-6-14

TOM KOPER, PE, DISTRICT ENGINEER, DEPARTMENT OF WATER AND POWER — DATE: 4-30-14

CITY OF CORONA

STD 414

SHEET 1 OF 3

FILE: G:\ENGINEERING\STANDARDS\2012 DWP STANDARDS\2012 STANDARD PLANS\STD_414A_REV2.DWG

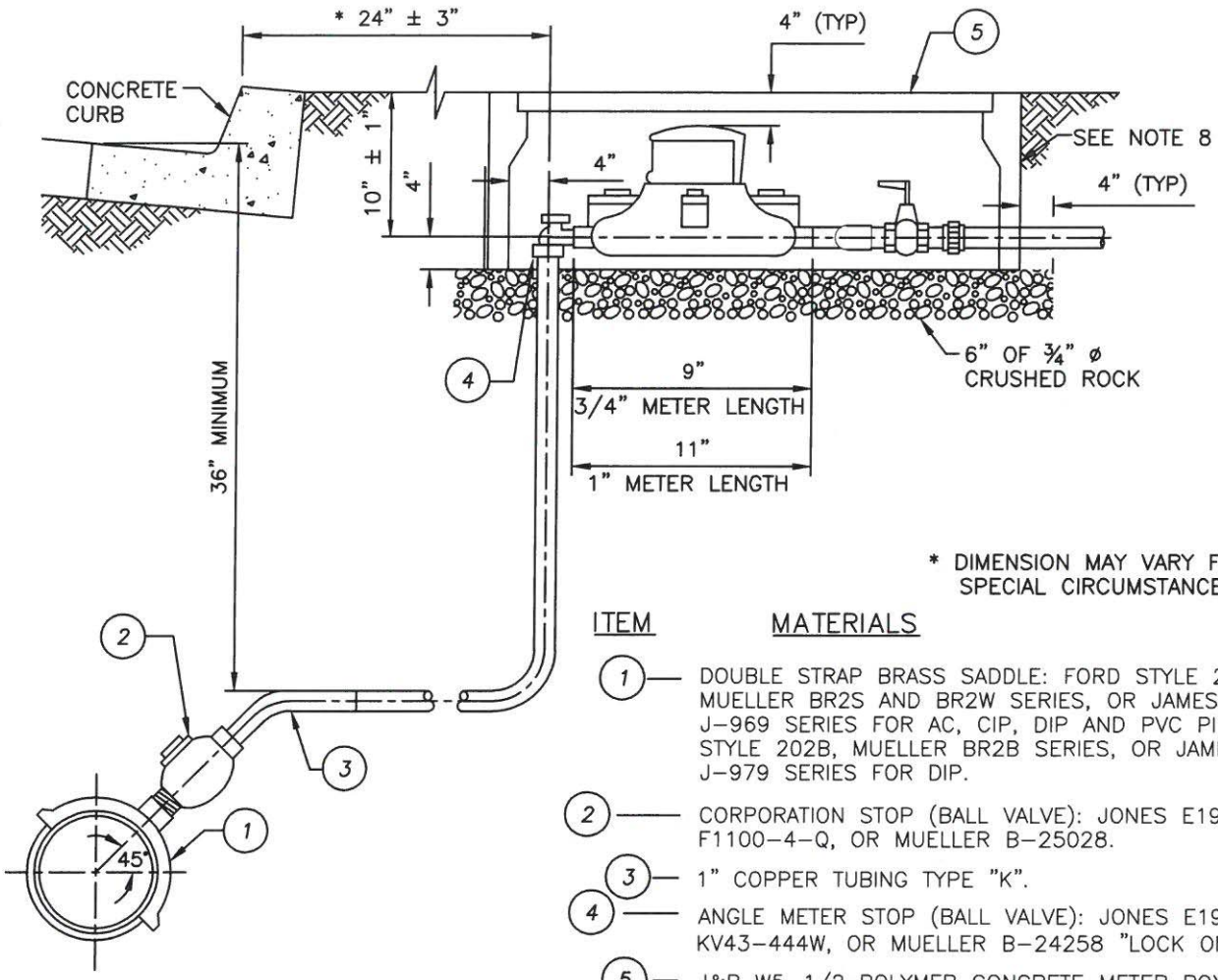

* DIMENSION MAY VARY FOR SPECIAL CIRCUMSTANCES.

ITEM	MATERIALS
1	DOUBLE STRAP BRASS SADDLE: FORD STYLE 202BSD, MUELLER BR2S AND BR2W SERIES, OR JAMES JONES J-969 SERIES FOR AC, CIP, DIP AND PVC PIPES. FORD STYLE 202B, MUELLER BR2B SERIES, OR JAMES JONES J-979 SERIES FOR DIP.
2	CORPORATION STOP (BALL VALVE): JONES E1935SG, FORD F1100-4-Q, OR MUELLER B-25028.
3	1" COPPER TUBING TYPE "K".
4	ANGLE METER STOP (BALL VALVE): JONES E1966W, FORD KV43-444W, OR MUELLER B-24258 "LOCK ON" STYLE.
5	J&R W5-1/2 POLYMER CONCRETE METER BOX AND COVER WITH POLYMER CONCRETE READING LID LABELED "WATER". 17"x28"x12" INSIDE DIMENSIONS. (J&R W6-T FOR H-20 LOADS).

NOTES:

1. SERVICE SADDLE SHALL NOT BE INSTALLED WITHIN 12-INCHES OF VALVE, COUPLING, JOINT, OR FITTING.
2. DOUBLE-WRAP ALL PIPING BELOW GRADE IN BLUE COLORED 8-MIL POLYETHYLENE SLEEVES LABELED POTABLE WATER. EXTEND POLYETHYLENE SLEEVES 2-INCHES MINIMUM ABOVE FINISH GRADE. SECURE WITH 10-MIL TAPE.
3. ALL CONNECTIONS TO COPPER TUBING SHALL BE COMPRESSION TYPE AND SERVICE MUST BE CONTINUOUS AND UNCUT. NO SWEAT TYPE FITTINGS ALLOWED.
4. CONNECTIONS TO STEEL WATER MAINS SHALL BE WITH A WELDED 3000 POUND HALF COUPLING AND DIELECTRIC INSULATING BUSHING. ALL STEEL SURFACES SHALL BE COVERED WITH CEMENT MORTAR.
5. ROUND AND DE-BURR ALL COPPER PIPE PRIOR TO INSTALLATION.
6. WRAP SERVICE SADDLE WITH 8-MIL POLYETHYLENE.
7. INSTALL BRASS PIPING AND FITTINGS INSIDE METER BOX BETWEEN ANGLE METER STOP AND BRASS UNIONS.
8. INSTALL METER BOXES AT THE DESIGN GRADE WITH A PRE-LOWERED ANGLE METER STOP. IF THE BOX AND METER ASSEMBLY MUST BE LOWERED/RAISED TO A NEW GRADE THEN THE SUPPLY PIPE SHALL BE FROZEN AND THE ANGLE METER STOP GASKETS SHALL BE REPLACED.
9. PROVIDE METER BOXES IN UNIMPROVED STREETS AND BEHIND ROLLED CURBS WITH COVERS AND BOXES RATED FOR H-20 TRAFFIC LOADS.

NOT TO SCALE

1" WATER SERVICE CONNECTION DETAIL WITHOUT FIRE SPRINKLER SERVICE

REVISION		
NO.	APPROVED	DATE
1	VRW	2/13/14
2	VRW	4/30/14

APPROVED:

NELSON D. NELSON, PE, CITY ENGINEER — DATE 5-6-14

TOM KOPER, PE, DISTRICT ENGINEER, DEPARTMENT OF WATER AND POWER — DATE 4-30-14

CITY OF CORONA

STD 414

SHEET 2 OF 3

FILE: G:\ENGINEERING\STANDARDS\2012 DWP STANDARDS\2012 STANDARD PLANS\STD_414B_REV2.DWG

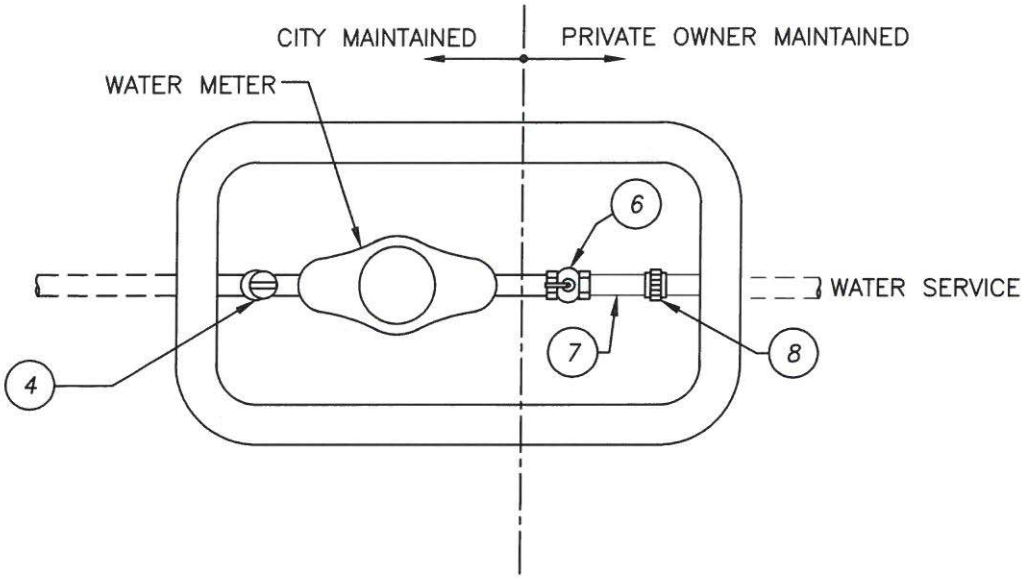

NOTES:

1. ALL CONNECTIONS TO COPPER TUBING SHALL BE COMPRESSION TYPE AND SERVICE MUST BE CONTINUOUS AND UNCUT. NO SWEAT TYPE FITTINGS ALLOWED.
2. ROUND AND DE-BURR ALL COPPER PIPE PRIOR TO INSTALLATION.
3. EQUIP ALL SERVICES WITH A "LOCK ON" STYLE ANGLE METER STOP, A "LOCK ON" STYLE BALL VALVE FOR FIRE SERVICE, AND A "LOCK OFF" STYLE BALL VALVE FOR THE DOMESTIC WATER SERVICE.
4. INSTALL BRASS PIPING AND FITTINGS INSIDE METER BOX BETWEEN ANGLE METER STOP AND BRASS UNIONS.
5. INSTALL METER BOXES AT THE DESIGN GRADE WITH A PRE-LOWERED ANGLE METER STOP. IF THE BOX AND METER ASSEMBLY MUST BE LOWERED/RAISED TO A NEW GRADE THEN THE SUPPLY PIPE SHALL BE FROZEN AND THE ANGLE METER STOP GASKETS SHALL BE REPLACED.
6. PROVIDE METER BOXES IN UNIMPROVED STREETS AND BEHIND ROLLED CURBS WITH COVERS AND BOXES RATED FOR H-20 TRAFFIC LOADS.

ITEM	MATERIALS
4	ANGLE METER STOP (BALL VALVE): JONES E1966W, FORD KV43-444W, OR MUELLER B-24258 "LOCK ON" STYLE.
6	METER VALVE. USE JONES STYLE E1908DL OR FORD STYLE #B13 WITH HB-34S "LOCK OFF" HANDLE.
7	RED BRASS NIPPLE, THREADED BOTH ENDS, SIZE AS REQUIRED.
8	BRASS UNION.

NOT TO SCALE

1" WATER SERVICE CONNECTION DETAIL WITHOUT FIRE SPRINKLER SERVICE

REVISION		
NO.	APPROVED	DATE
1	VRO	2/13/14
2	VRW	4/30/14

APPROVED:

NELSON D. NELSON, PE, CITY ENGINEER — DATE 5-6-14

TOM KOPER, PE, DISTRICT ENGINEER, DEPARTMENT OF WATER AND POWER — DATE 4-30-14

CITY OF CORONA

STD 414

SHEET 3 OF 3

FILE: G:\ENGINEERING\STANDARDS\2012 DWP STANDARDS\2012 STANDARD PLANS\STD_414C_REV2.DWG

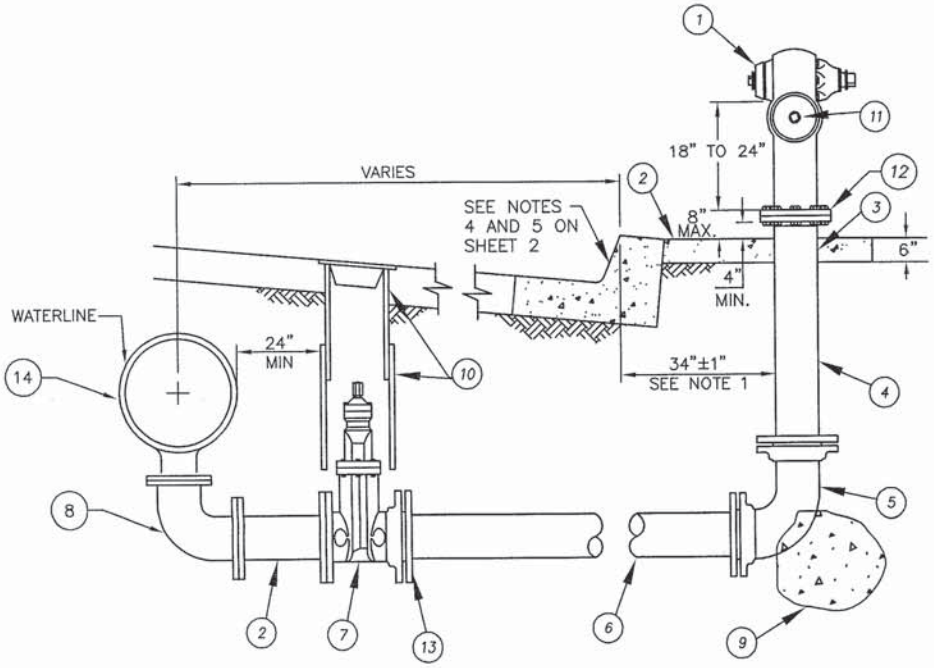

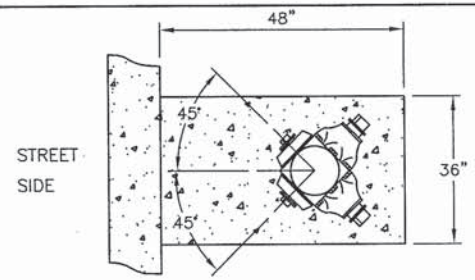

FIRE HOSE OUTLET ORIENTATION

ITEM	MATERIALS
1	RESIDENTIAL HYDRANT, 8-HOLE PATTERN, WITH (1) 4-INCH AND (1) 2-1/2-INCH FIRE HOSE OUTLETS, CLOW 850 OR 2050, OR JAMES JONES 3710 OR 4040B.
2	6" DIA. FLG DI SPOOL, IF REQUIRED.
3	REPLACE SIDEWALK PER CITY STD. 103-00 OR CONSTRUCT 48-INCHx36-INCHx6-INCH THICK 560-C-3250 CONCRETE PAD WITHIN PARKWAY. SEE HYDRANT LOCATION PLANS BELOW FOR APPLICABLE CONDITION.
4	6-INCH DIA. FLG X PE DI SPOOL, CLASS 350.
5	6-INCH DIA. MJ DI 90-DEGREE BEND, RESTRAINED.
6	6-INCH DIA. DI PIPE, CLASS 350, RESTRAINED JOINT.
7	6-INCH RESILIENT WEDGE GATE VALVE FLG X MJ RESTRAINED PER CITY STD. DWG. 420.
8	6-INCH DIA. FLANGE DI 90-DEGREE BEND.
9	CONCRETE THRUST BLOCK PER CITY STD. DWG. 401 UPON DWP GENERAL MANAGER OR DESIGNEE APPROVAL.
10	VALVE BOX PER CITY STD. DWG. 422.
11	FIRE HYDRANT CAPS, PLASTIC W/O CHAINS.
12	BREAK-OFF BOLTS. 5/8-INCH X 3-INCH W/ BOLTS UP (8-HOLE PATTERN). (PRE-FILLED BOLTS WITH SILICONE INSTALLED UP).
13	MJ PIPE RESTRAINT, EBBA IRON MEGALUG SERIES 1100.
14	MAINLINE SIZE X 6-INCH MJ X MJ X FLG TEE WITH RESTRAINED JOINTS AND CONCRETE THRUST BLOCK PER CITY STD. DWG. 401 UPON DWP GENERAL MANAGER OR DESIGNEE APPROVAL.

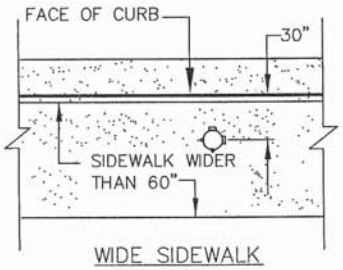

WIDE SIDEWALK CONDITION 1
(ONLY BY APPROVAL OF DWP GENERAL MANAGER OR DESIGNEE)

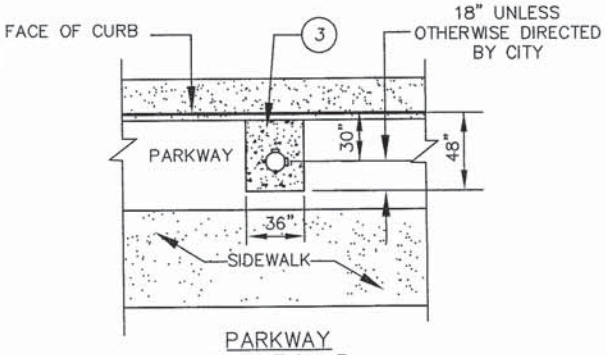

PARKWAY CONDITION 3

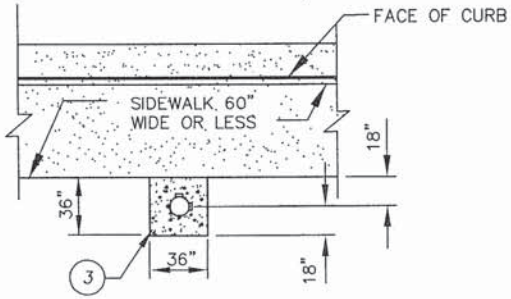

NARROW SIDEWALK CONDITION 2

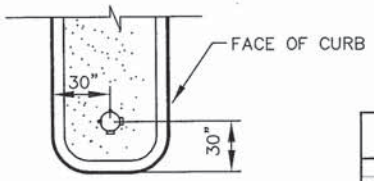

MEDIAN CONDITION 4

HYDRANT LOCATION PLANS

NOTES:

1. DO NOT CONSTRUCT FIRE HYDRANT CLOSER THAN 10-FEET TO DRIVEWAY RETURN WITHOUT PRIOR APPROVAL BY DWP GENERAL MANAGER OR DESIGNEE.

6" FIRE HYDRANT BLOW-OFF ASSEMBLY

REVISION		
NO.	APPROVED	DATE

APPROVED:
NELSON D. NELSON, PE, CITY ENGINEER — DATE 11-27-12
TOM KOPER, PE, DISTRICT ENGINEER, DEPARTMENT OF WATER AND POWER — DATE 11-20-12

CITY OF CORONA

STD 416

SHEET 1 OF 2

FILE: G:\ENGINEERING\STANDARDS\2012 DWP STANDARDS\2012 STANDARD PLANS\STD_416A.DWG

NOTES:

1. FLANGE NUTS, BOLTS, AND WASHERS SHALL BE TYPE 316SS. LUBRICATE BOLTS WITH ANTI-SEIZE LUBRICANT.
2. CONSTRUCT CONCRETE THRUST BLOCK ON MAINLINE TEE PER CITY STD. DWG. 401 WHERE WATER MAIN IS NOT OTHERWISE FULLY RESTRAINED.
3. DIMENSIONS MAY VARY FOR SPECIAL CIRCUMSTANCES; CUL-DE-SACS, PRIVATE STREETS, SIDEWALKS ADJACENT TO CURBS, ETC. WHERE SPECIFICALLY REQUIRED ON THE APPROVED PLANS.
4. CHISEL A 1-1/2-INCH TALL "V" IN THE CURB FACE TO INDICATE LOCATION OF VALVE.
5. CHISEL (2) "X"'S AND THEIR RESPECTIVE DISTANCES IN THE CURB TO BE USED AS "TIE" LOCATIONS FOR VALVE CAN.
6. 6-INCH LATERAL PIPELINE (FULLY RESTRAINED) SHALL MATCH THE CLASS OF THE ADJACENT MAIN LINE PIPE.
7. PRIOR TO FINAL WALK/ACCEPTANCE PAINT FIRE HYDRANT AND CAPS RUST-O-LEUM OLD CAT YELLOW - 76486.
8. VALVE SHALL BE ACCESSIBLE AT ALL TIMES.
9. DEVELOPER/INSTALLER SHALL SUPPLY AND PLACE BLUE-DOT REFLECTING RAISED ROADWAY MARKERS PER CITY STD. DWG. 531.
10. BORE UNDER CURB & GUTTER FOR CONSTRUCTION OF HYDRANT LATERAL.
11. PROVIDE 3-FOOT MINIMUM HORIZONTAL CLEARANCE BETWEEN FIRE HYDRANT AND ALL OTHER ADJACENT ABOVE GROUND IMPROVEMENTS.
12. PROVIDE 1-1/2-INCH OPERATING NUTS ON ALL FIRE HYDRANT OPERATORS.
13. WRAP PIPE AND VALVE WITH A DOUBLE LAYER OF 8-MIL BLUE POLYETHYLENE.

6" FIRE HYDRANT BLOW-OFF ASSEMBLY				
REVISION			APPROVED:	CITY OF CORONA
NO.	APPROVED	DATE	Nelson D. Nelson 11-26-12 NELSON D. NELSON, PE, CITY ENGINEER — DATE	STD 416
			Tom Koper 11-20-12 TOM KOPER, PE, DISTRICT ENGINEER, DEPARTMENT OF WATER AND POWER — DATE	SHEET 2 OF 2

FILE: G:\ENGINEERING\STANDARDS\2012 DWP STANDARDS\2012 STANDARD PLANS\STD_416B.DWG

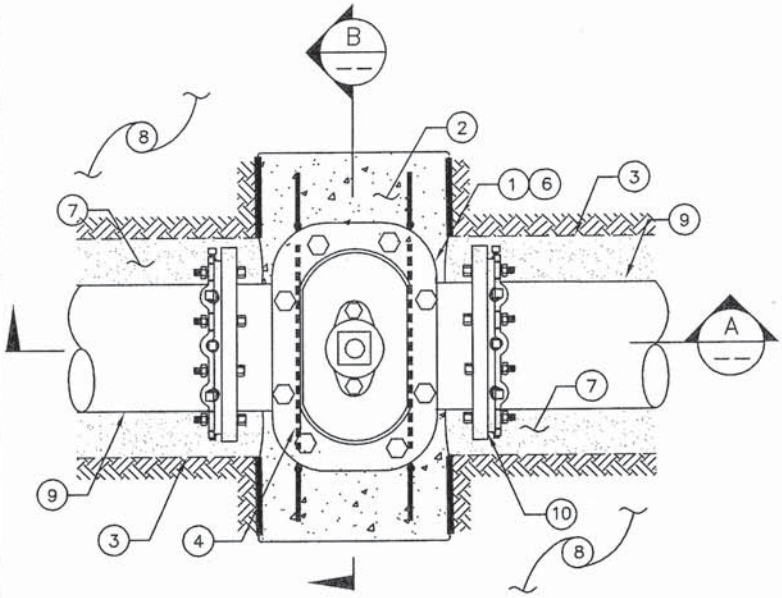

PLAN
NO SCALE

NOTES:

1. RESILIENT WEDGE GATE VALVE PER AWWA C515. INSTALL TYPE 316SS BONNET BOLTS AND NUTS.
2. CONCRETE SUPPORT/THRUST BLOCK PER CITY STD. DWG. 401.
3. TRENCH BOUNDARY.
4. #4 REBAR ANCHORS (MIN). PER CITY STD. DWG. 401
5. VALVE CAN AND RISER PER CITY STD. DWG. 422.
6. WRAP VALVES WITH TWO LAYERS OF 8-MIL POLYETHYLENE PRIOR TO CONCRETE PLACEMENT.
7. PIPE BEDDING PER CITY STD. DWG. 406.
8. UNDISTURBED EARTH.
9. PIPE PER PLANS.
10. RESTRAINED MECHANICAL JOINT, EBAA IRON MEGALUG SERIES 1100, TYPE 316SS MOUNTING HARDWARE.

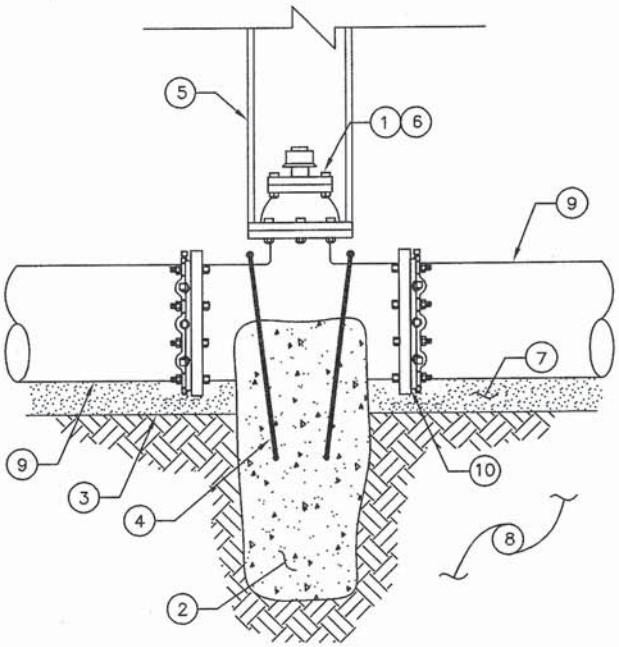

SECTION A
NO SCALE

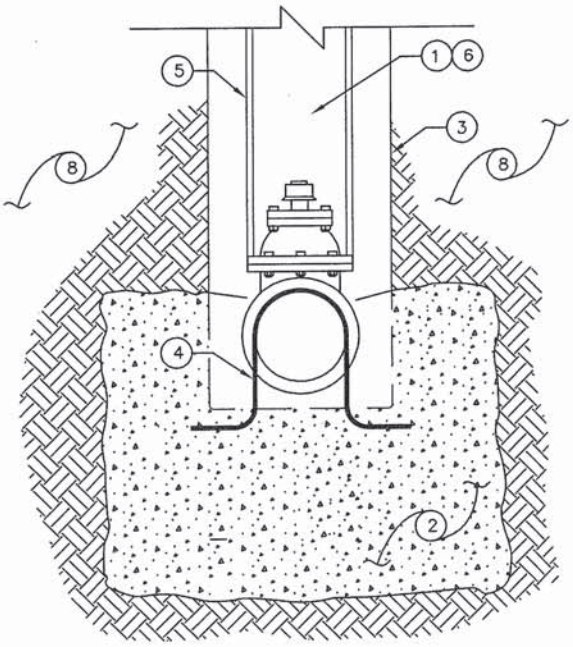

SECTION B
NO SCALE

RESILIENT WEDGE GATE VALVE INSTALLATION

REVISION		
NO.	APPROVED	DATE

APPROVED:

NELSON D. NELSON, PE, CITY ENGINEER — DATE: 11-26-2012

TOM KOPER, PE, DISTRICT ENGINEER, DEPARTMENT OF WATER AND POWER — DATE: 11-20-12

CITY OF CORONA

STD 420

SHEET 1 OF 1

FILE: G:\ENGINEERING\STANDARDS\2012 DWP STANDARDS\2012 STANDARD PLANS\STD_420.DWG

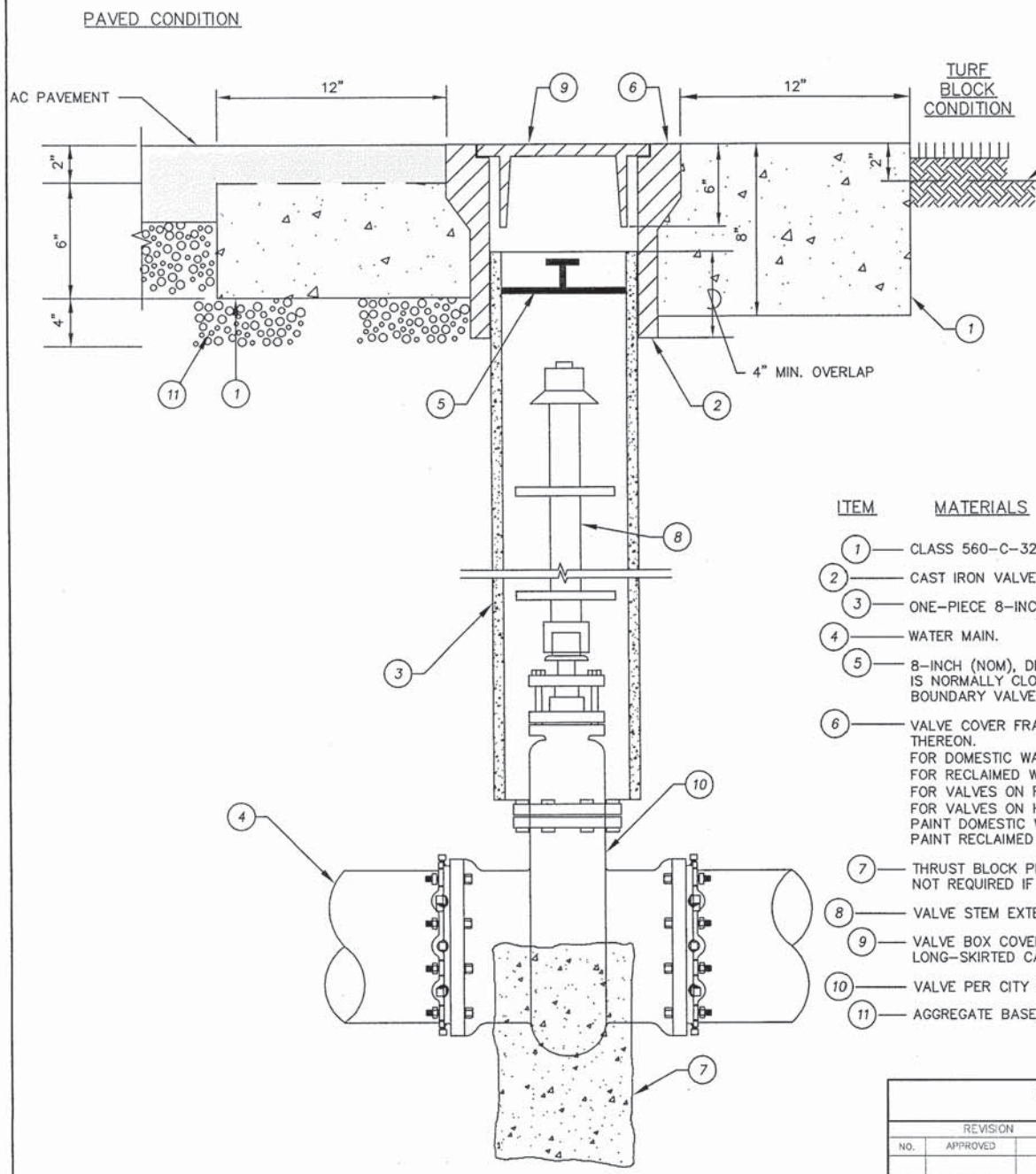

NOTES:

1. PROVIDE VALVE STEM EXTENSION IF DEPTH TO VALVE NUT EXCEEDS 60 INCHES.
2. IN NEW TRACT DEVELOPMENTS EXTEND VALVE RISER 24 INCHES ABOVE GROUND SURFACE FOR INTERIM CONDITIONS.
3. SET TRIANGULAR COVERS SUCH THAT APEX OR TRIANGLE POINT ALONG AXIS OF PIPE IS AWAY FROM NEAREST FITTING.
4. OFF-SET MARKS/TIE-OUTS FOR ALL NEW WATER VALVE INSTALLATIONS SHALL BE MARKED ON CURBS. AS FOLLOWS:
   A. CHISEL A 1-1/2-INCH TALL "V" IN THE CURB FACE TO INDICATE LOCATION OF VALUE.
   B. CHISEL (2) "X's" AND THEIR RESPECTIVE DISTANCES IN THE CURB TO BE USED AS "TIE" LOCATIONS FOR VALVE CAN.
5. VALVE MUST BE ACCESSIBLE AT ALL TIMES.

ITEM	MATERIALS
1	CLASS 560-C-3250 CONCRETE COLLAR.
2	CAST IRON VALVE BOX.
3	ONE-PIECE 8-INCH (C-900, CL150) PVC PIPE.
4	WATER MAIN.
5	8-INCH (NOM), DEBRIS CAP. PROVIDE LOCKING DEVICE IF VALVE IS NORMALLY CLOSED OR VALVE IS A PRESSURE ZONE BOUNDARY VALVE.
6	VALVE COVER FRAME TO BE IRON WITH LETTERS "CORONA" CAST THEREON. FOR DOMESTIC WATER LINES ADD "WATER" ON LID, FOR RECLAIMED WATERLINES ADD "RW" ON LID, FOR VALVES ON FIRE HYDRANT LATERALS ADD "FH" ON LID, FOR VALVES ON HYDRANT STYLE BLOWOFF ADD 'BO' ON LID, PAINT DOMESTIC WATERLINE VALVE BOX FRAME AND LID BLUE, PAINT RECLAIMED WATERLINE VALVE BOX FRAME AND LID PURPLE.
7	THRUST BLOCK PER CITY STD. DWG. 401. THRUST BLOCK NOT REQUIRED IF PIPELINE IS FULLY RESTRAINED.
8	VALVE STEM EXTENSION. SEE SHEET 2.
9	VALVE BOX COVER PER DETAIL HEREON. USE 6-INCH LONG-SKIRTED CAST IRON LID FOR ROUND BOXES.
10	VALVE PER CITY STD. DWG 420.
11	AGGREGATE BASE.

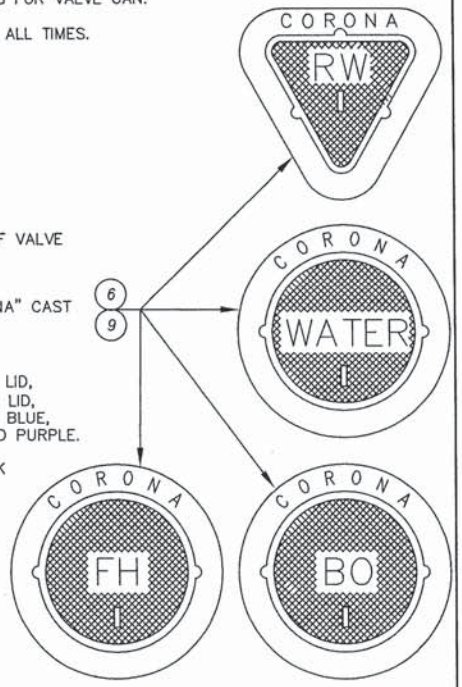

VALVE BOX AND VALVE STEM EXTENSION

REVISION		
NO.	APPROVED	DATE

APPROVED:
NELSON D. NELSON, PE, CITY ENGINEER — DATE 11-26-12
TOM KOPER, PE, DISTRICT ENGINEER, DEPARTMENT OF WATER AND POWER — DATE 11-20-12

CITY OF CORONA

STD 422

SHEET 1 OF 2

FILE: G:\ENGINEERING\STANDARDS\2012 DWP STANDARDS\2012 STANDARD PLANS\STD_422A.DWG

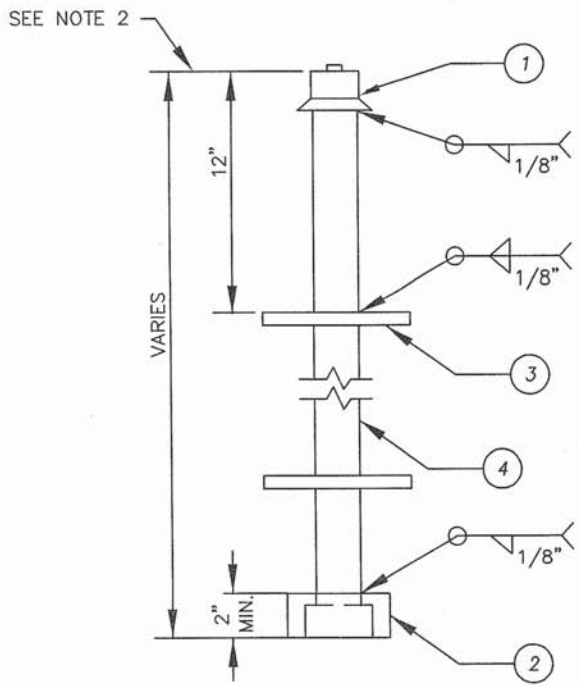

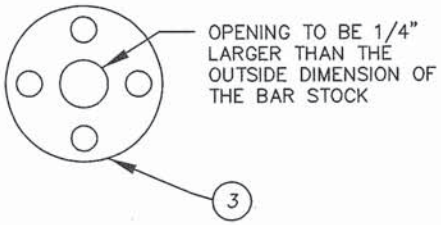

ITEM	MATERIALS
1	AWWA 2-INCH SQUARE OPERATING NUT
2	AWWA SOCKET FOR 2-INCH SQUARE OPERATING NUT
3	6-1/2-INCH DIA. X 3/16-INCH SPACER PLATE
4	1-1/4-INCH SOLID, ROUND OR SQUARE STEEL BAR STOCK (PINNED COUPLERS ARE NOT ALLOWED. HOLLOW TUBE OR PIPE ARE NOT ALLOWED.)

NOTES:

1. PROVIDE VALVE STEM EXTENSION WHEN DEPTH TO OPERATING NUT EXCEEDS 60 INCHES (FABRICATE EXTENSION TO FIELD MEASUREMENT – SEE NOTE 2).
2. TERMINATE EXTENSION 24 INCHES TO 36 INCHES FROM FINISHED SURFACE.
3. PROVIDE ADDITIONAL SPACER PLATE(S) WHEN DISTANCE TO BOTTOM SOCKET EXCEEDS 60 INCHES BEYOND LOWEST PLATE.

VALVE BOX AND VALVE STEM EXTENSION

REVISION		
NO.	APPROVED	DATE

APPROVED:
NELSON D. NELSON, PE, CITY ENGINEER — DATE 11-26-12
TOM KOPER, PE, DISTRICT ENGINEER, DEPARTMENT OF WATER AND POWER — DATE 11-20-12

CITY OF CORONA

STD 422

SHEET 2 OF 2

FILE: G:\ENGINEERING\STANDARDS\2012 DWP STANDARDS\2012 STANDARD PLANS\STD_422B.DWG

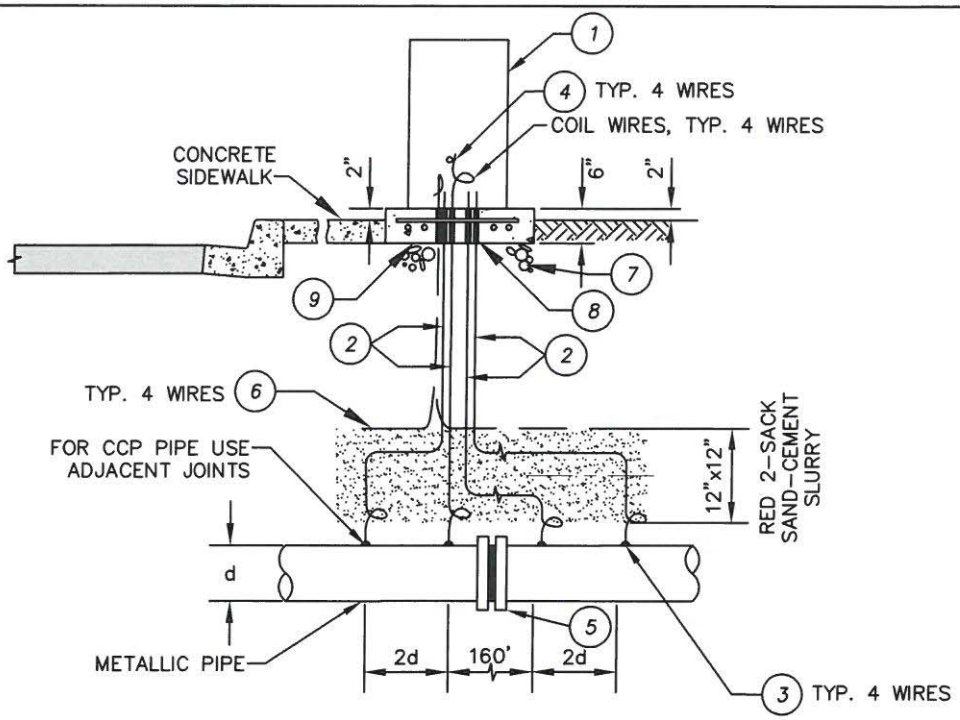

ITEM	MATERIALS
1	20-INCH WIDE X 18-INCH DEEP X 31-INCH HIGH NEMA 3R PEDESTAL CABINET, TYPE 316SS, PAINTED GREEN, WITH BACKPANEL AND PAD LOCKABLE HINGED DOOR, MYERS MEUG-UM-31, HOFFMAN OR EQUAL. ANCHOR TO 6-INCH THICK CONCRETE SLAB PER MANUFACTURER'S RECOMMENDATION USING TYPE 316SS MOUNTING HARDWARE WITH LEVELING NUTS. INSTALL 1-1/2-INCH THICK NON-SHRINK GROUT UNDER PEDESTAL FRAME.
2	NO. 8 STRANDED COPPER WIRE WITH BLACK INSULATION. COIL BOTH ENDS PER NOTE 1.
3	ALUMINO-THERMIC WELD OR PIN BRAZING ON CERAMIC EPOXY LINED DIP PER CITY STD. DWG. 456.
4	IDENTIFICATION TAGS PER CITY STD. DWG. 454.
5	FLANGE INSULATING TEST KIT PER CITY STD. DWG. 458.
6	6-INCH WIDE RED PLASTIC WARNING TAPE, LABELED CATHODIC PROTECTION.
7	6 INCHES OF 3/4-INCH CRUSHED ROCK BEDDING.
8	2-INCH SCH. 80 PVC CONDUITS THROUGH HOUSEKEEPING SLAB.
9	560-C-3250 CONCRETE PAD, 3'-0" X 4'-0" X 6" THICK.

NOTES:

1. PROVIDE 3 FEET OF COILED SLACK IN EACH WIRE AT EACH END (I.E. AT PIPE AND INSIDE THE PEDESTAL).
2. FOR LOCATIONS OF TEST STATION PEDESTALS IN STREET RIGHT-OF-WAY SEE CITY STD. DWG. 455.
3. TEST STATIONS TO BE INSTALLED AT LOCATIONS SHOWN ON PROJECT PLANS.
4. IMPROVED AREAS – CHIP 1-1/2-INCH (CTS) IN CENTER LINE OF THE CURB FACE TO MARK THE CATHODIC TEST STATION LOCATION.
5. PRIOR TO ACCEPTANCE BY THE DWP GENERAL MANAGER OR DESIGNEE, THE TEST STATION SHALL BE TESTED FOR CONTINUITY AND BASE LINE DATA.
6. THE TEST STATION SHALL EXTEND PERPENDICULAR TO THE CENTERLINE OF THE STREET FROM THE WATER MAIN TO THE TEST STATION PEDESTAL.

NOT TO SCALE

INSULATOR TEST STATION

REVISION		
NO.	APPROVED	DATE
1	V PW	9/4/13

APPROVED:

NELSON D. NELSON, PE, CITY ENGINEER — DATE 12-18-2013

TOM KOPER, PE, DISTRICT ENGINEER, DEPARTMENT OF WATER AND POWER — DATE 12-16-13

CITY OF CORONA

STD 453

SHEET 1 OF 1

FILE: G:\ENGINEERING\STANDARDS\2012 DWP STANDARDS\2012 STANDARD PLANS\STD_453_REV1.DWG

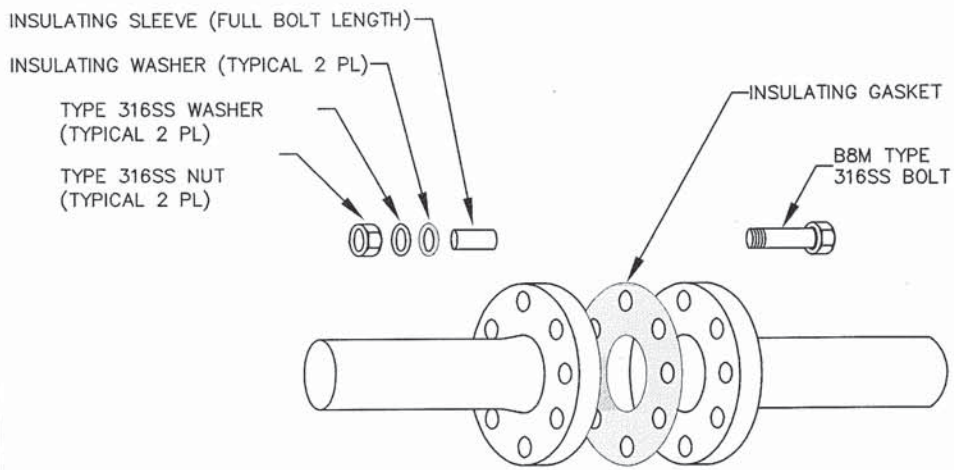

INSULATING FLANGE KIT

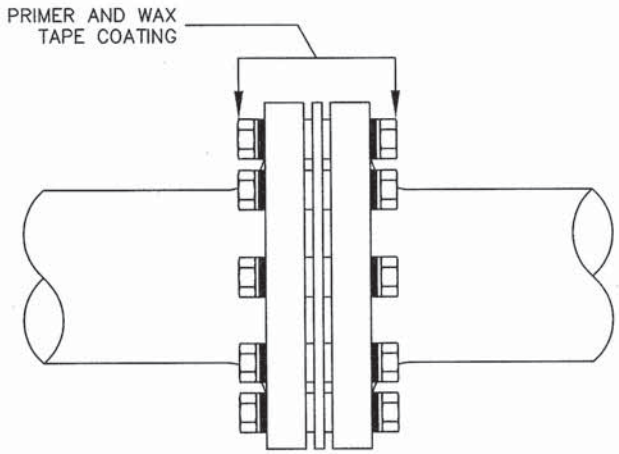

BURIED INSULATING FLANGE COATING

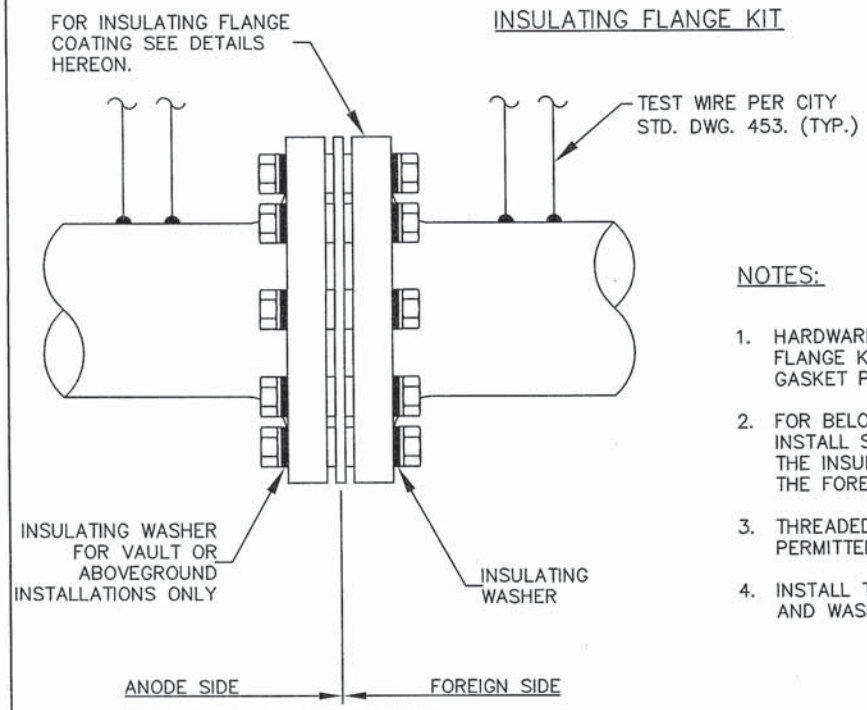

NOTES:

1. HARDWARE QUANTITIES IN INSULATING FLANGE KIT WILL VARY BASED ON GASKET PATTERN AND PIPE SIZE.
2. FOR BELOW GROUND INSTALLATIONS, INSTALL SINGLE-WASHER KITS WITH THE INSULATING WASHERS ONLY ON THE FOREIGN SIDE OF THE FLANGES.
3. THREADED STUD STYLE KITS ARE NOT PERMITTED.
4. INSTALL TYPE 316SS BOLTS, NUTS AND WASHERS.

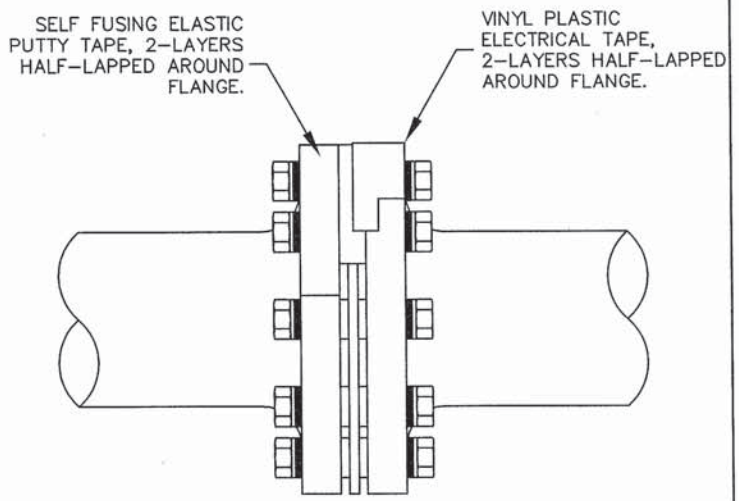

ABOVE GROUND INSULATING FLANGE COATING

INSULATING JOINT

REVISION		
NO.	APPROVED	DATE

APPROVED: 11-26-12
NELSON D. NELSON, PE, CITY ENGINEER — DATE

11-20-12
TOM KOPER, PE, DISTRICT ENGINEER, DEPARTMENT OF WATER AND POWER — DATE

CITY OF CORONA

STD 458

SHEET 1 OF 1

FILE: G:\ENGINEERING\STANDARDS\2012 DWP STANDARDS\2012 STANDARD PLANS\STD_458.DWG

"BLUE DOT" TYPE I MARKER PLACEMENT NOTES

1. THE REFLECTIVE SIDE SHALL FACE THE FLOW OF TRAFFIC.

2. THE "BLUE DOT" SHALL BE IN LINE WITH THE FIRE HYDRANT, EXCEPT WHERE TWO (2) DOTS ARE USED FOR INTERSECTIONS.

3. A BLUE REFLECTIVE MARKER WILL BE PLACED 6" ON CENTER FROM PAINTED LINES. IF NO TRAFFIC LINES EXIST, PLACE BLUE DOT 6" FROM CENTER OF THE STREET ON THE FIRE HYDRANT SIDE. (SEE STANDARD PLACEMENT DETAIL HEREON.)

4. IF A PAINTED TRAFFIC LIMIT LINE FOR STOP SIGNS EXISTS, PLACE THE SECOND "BLUE DOT" 2 FEET BACK FROM LINE, 6" ON CENTER FROM PAINTED TRAFFIC LIMIT LINE.

5. IF NO TRAFFIC LIMIT LINE FOR STOP SIGNS EXISTS, PLACE "BLUE DOT" IN LINE WITH SIDEWALK EDGE ON THE SIDE CLOSEST TO PROPERTY LINE, 6" ON CENTER FROM THE CENTER OF THE STREET LINE.

6. THE "BLUE DOT" SHALL BE APPLIED TO A DRY, DIRT FREE STREET AND ENOUGH ADHESIVE SHALL BE APPLIED SO THAT SOME ADHESIVE OOZES OUT AROUND THE EDGES OF THE "BLUE DOT".

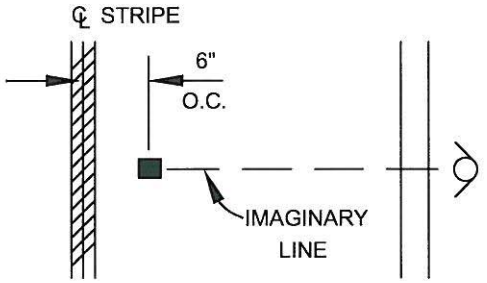

UNMARKED STREETS: PLACE MARKER 6" FROM EDGE OF IMAGINARY LINE OF STREET ON HYDRANT SIDE.

MARKED STREETS: PLACE MARKER 6" FROM CENTERLINE OF PAINTED LINE TO CENTERLINE OF MARKER ON HYDRANT SIDE.

— FIRE HYDRANT — BLUE MARKER

"BLUE DOT" TYPE I MARKER PLACEMENT

REGISTERED PROFESSIONAL ENGINEER
KIP D. FIELD
No. C 45679
Exp. 12-31-10
CIVIL
STATE OF CALIFORNIA

APPROVED BY:

11/23/09

CITY ENGINEER — DATE

KIP D. FIELD

REVISION	DESCRIPTION	BY	DATE

CITY OF CORONA

"BLUE DOT" TYPE 1
MARKER PLACEMENT

STANDARD PLAN NUMBER: **531**

SHT 1 OF 3

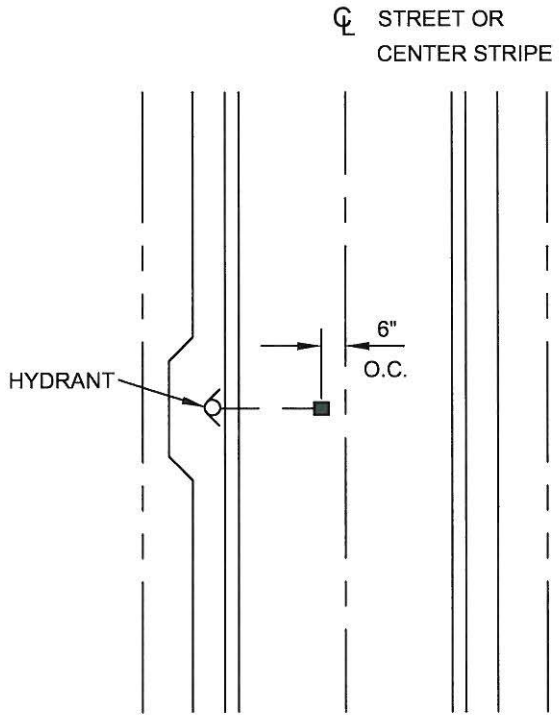

TWO LANE STREET

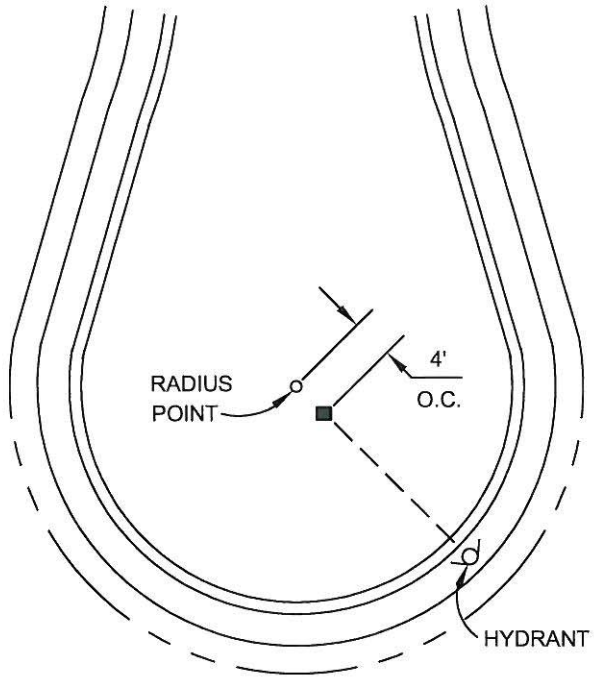

CUL-DE-SAC

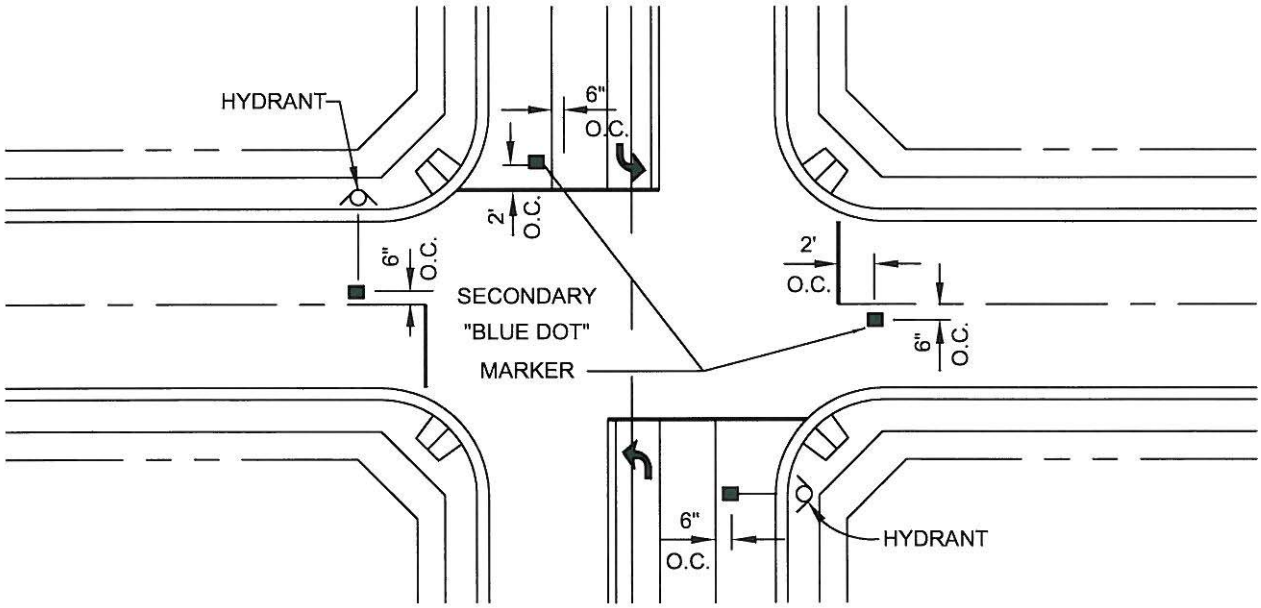

STREET INTERSECTION

REGISTERED PROFESSIONAL ENGINEER
KIP D. FIELD
No. C 45679
Exp. 12-31-10
CIVIL
STATE OF CALIFORNIA

APPROVED BY:

11/23/09

CITY ENGINEER
KIP D. FIELD

DATE

REVISION	DESCRIPTION	BY	DATE

CITY OF CORONA

"BLUE DOT" TYPE I MARKER PLACEMENT
STREET INTERSECTION &
CUL-DE-SACS

STANDARD PLAN NUMBER: **531**

SHT 2 OF 3

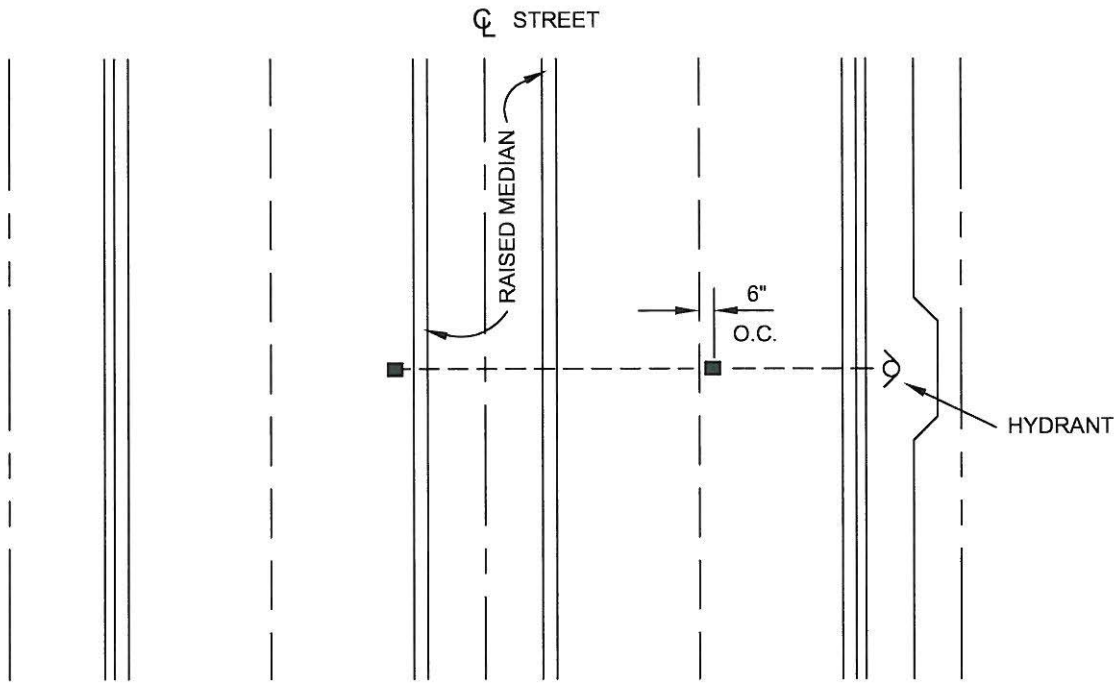

DIVIDED STREET

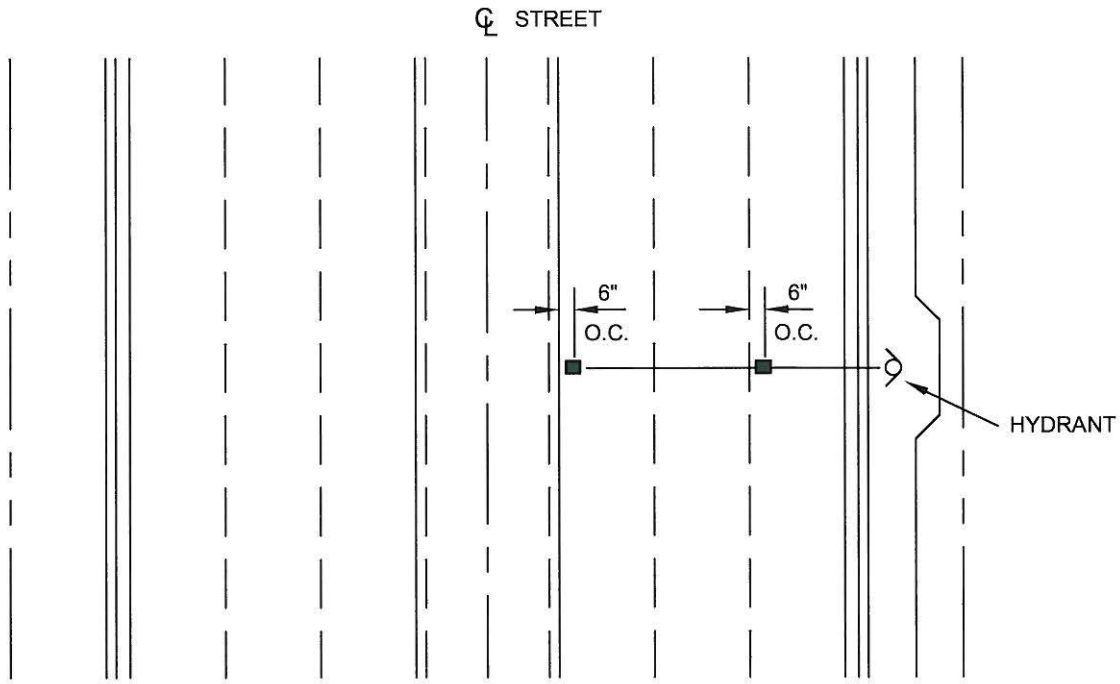

STREET WITH TURN LANE

REGISTERED PROFESSIONAL ENGINEER
KIP D. FIELD
No. C 45679
Exp. 12-31-10
CIVIL
STATE OF CALIFORNIA

APPROVED BY:

11/23/09

CITY ENGINEER — DATE

KIP D. FIELD

REVISION	DESCRIPTION	BY	DATE

CITY OF CORONA

"BLUE DOT" TYPE I MARKER PLACEMENT
DIVIDED STREET
STREET WITH TURN LANE

STANDARD PLAN NUMBER: **531**

SHT 3 OF 3