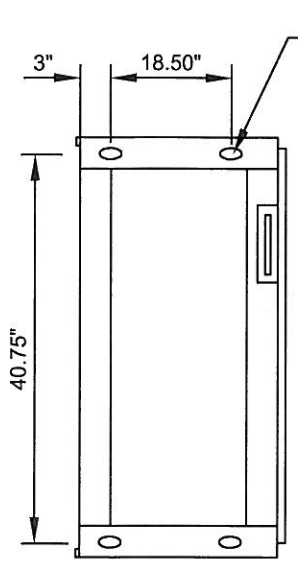

INSIDE BOTTOM VIEW
DOORS REMOVED
FOR CLARIFICATION

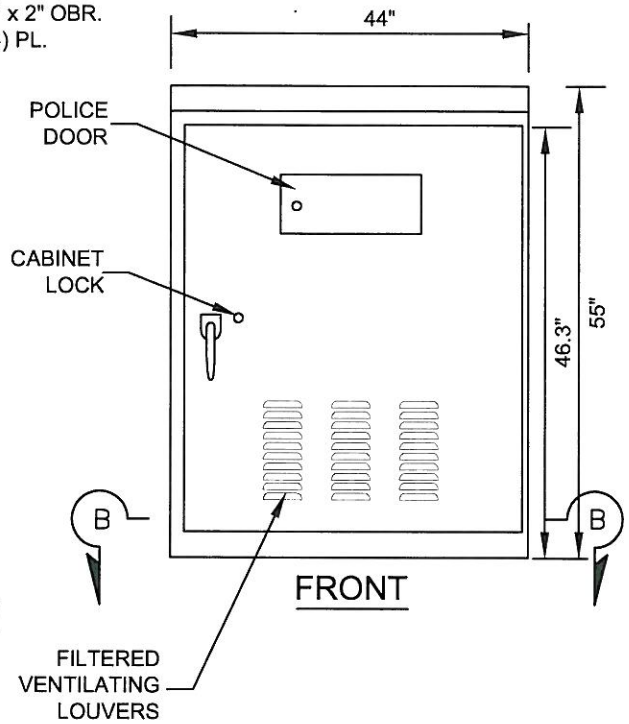

FRONT

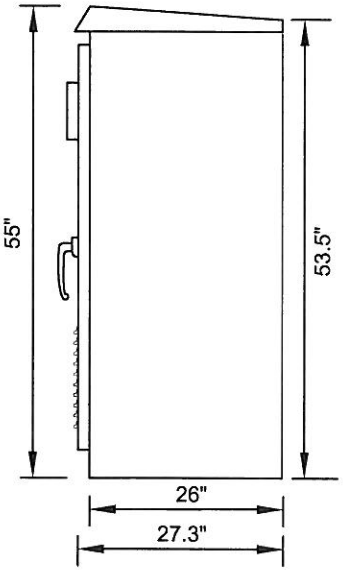

SIDE VIEW

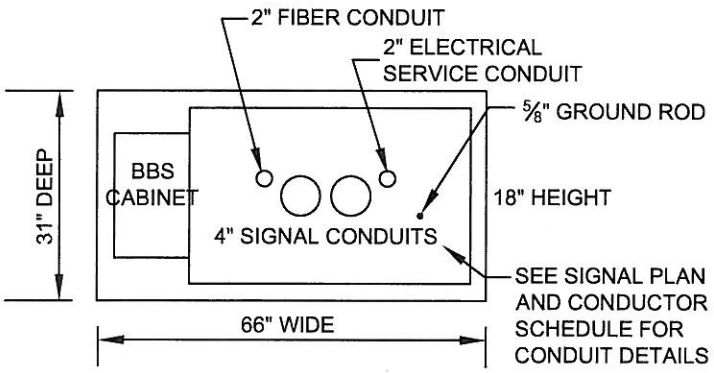

TOP VIEW OF CABINET
AND BBS FOUNDATION

TYPICAL CONDUIT LOCATION
IN CABINET FOUNDATION

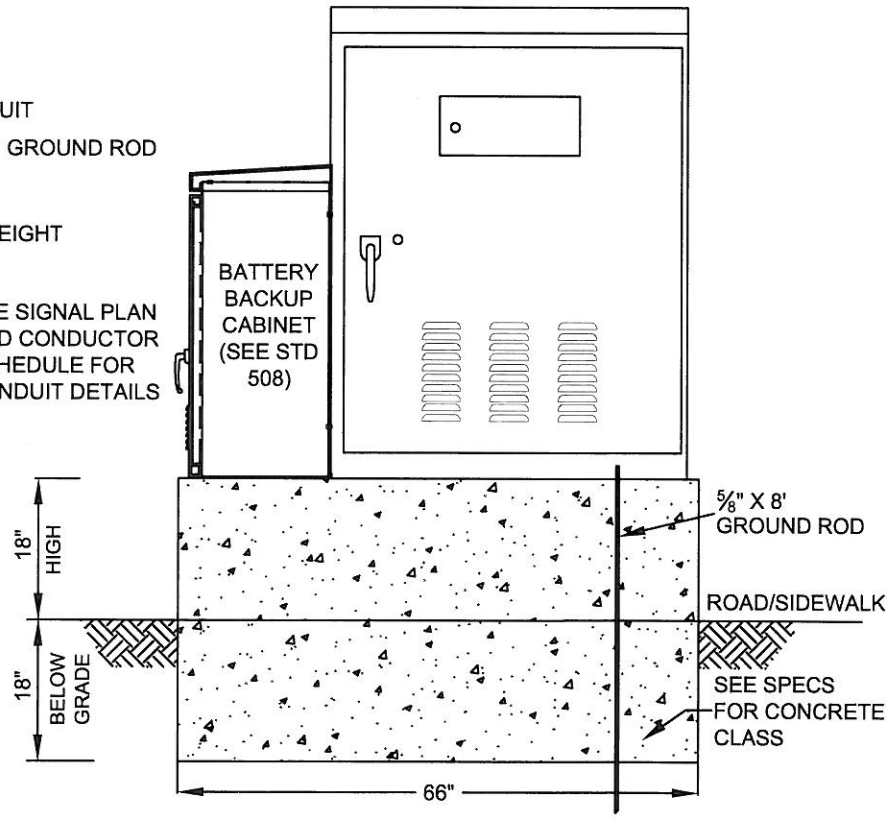

FRONT

NOTES

1. BATTERY BACK UP CABINET SHALL BE MOUNTED ON THE LEFT SIDE OF THE "P" CABINET LOOKING AT THE FRONT DOOR.

REVISIONS:		
NO.	DATE	APPRV'D

APPROVED BY:

7-19-10

CITY ENGINEER — DATE

KIP D. FIELD

RCE NO. 45679 EXP. DATE 12-31-10

CITY OF CORONA

TRAFFIC SIGNAL
TYPE "P" CABINET &
FOUNDATION DETAILS

STANDARD PLAN NUMBER: **532**

SHT 1 OF 1